EATON | Powerware

Marine UPS

Power protection systems on board for safety and business

Technology-dependent secure power

Of course the first thing to secure in a ship is the safety and navigation equipment. But the money comes from the entertainment. Let Eaton make sure power glitches won't stop your customers' spending in your onboard restaurants, casinos, shops and nightclubs. Eaton has supplied reliable marine uninterruptible power systems (UPS) to hundreds of vessels over more than 30 years. And no matter where in the world your ship sails, Eaton's global service network is always at hand.

The increasing amount of new technology installed on board presents a whole new set of challenges to the electrical power supply of a vessel or a rig. Today's sophisticated high technology equipment can fail to do its work or even get damaged if the input power has disturbances or breaks down completely. That is why power systems that supply uninterruptible and clean power are essential on board. These systems are called Uninterruptible Power Systems or UPS systems.

The equipment that needs power protection can be roughly divided into:

• safety and cruising related systems, such as navigation equipment and emergency lighting. Classification organisations normally require UPS protection for these systems.

• commercial applications, such as casinos and EPOS devices at restaurants and shops. Customer satisfaction depends on the smooth operation of these systems.

• business and management support, such as computer systems that enable continuous business management.

• special systems on board special vessels. Exploring, drilling, lifting, and cable laying, for example, is accurate and sensitive work where mistakes cannot be tolerated.

Eaton

Eaton has more than 30 years of experience in supplying the marine industry with Uninterruptible Power Systems (UPS). Eaton integrates a full line of AC and DC power systems, power conversion products, power managementsoftware, remote monitoring, turnkey integration services and site support. Eaton offers service on every step of installation projects from detailed design to a full installation.

Product lines

The Eaton product offering includes:
• AC UPS Systems 1- and 3- phase 1kVA – 4MVA

• battery systems, cabinets and racks
• power converters, e.g. frequency converters
• power management and monitoring software
• customised systems built to customers' exact needs

Applications onboard ship are many

- Navigation equipment
- Radio and telecom
- Satellite communication
- Voyage Data Recorder
- Dynamic positioning System

- Business and customer satisfaction
- Cash registers (EPOS) at hotels, tax free and other shops, restaurants, casinos and other entertainment venues

- Computer systems
- Internal cable TV
- Intercom, security
  visual systems
- Emergency Public

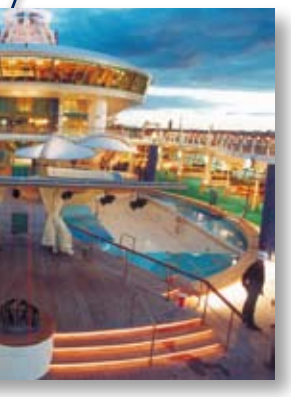

and networks

camera and audio-

Announcement system

- Emergency lighting
- Ship automation

- Azipod control
- Water-proof doors
- Power distribution, filtering
- Control/monitoring system

Technology

The harsh environmental conditions and the critical nature of the protected equipment set special dependability requirements for marine UPSs.

All Eaton marine UPSs are designed to meet the most stringent industry standards. The double conversion online topology with a static bypass switch is Eaton's choice for marine use. This topology protects against all types of power disturbances that may occur in the supplying ne twork and it is the only topology that meets the highest performance class, VFI-SS-111, requirements.
All Powerware UPSs are tested and certified to meet the appropriate safety and EMC standards.

Powerware UPSs are built into one cabinet that houses all the electronics: the rectifier, the inverter, the static bypass and the microprocessor control. This configuration allows the entire system to be controlled as one integral device. This leads to higher reliability than using separate power converters. It also saves plenty of valuable space.

The most critical loads may require increased protection. Therefore all 3-phase systems can be connected to parallel redundant configuration. In such a system two or more UPSs are supplying and sharing the same load.

Should a failure occur in any of the UPS units, the faulty unit is automatically disconnected from the load and the remaining unit or units continue to supply the load. This redundancy leads to extremely high system level reliability.

System performance monitoring is often crucial for continuous operation. Therefore a versatile combination of remote communication options via serial communication ports and potential free contacts are available.

Approvals
Eaton has been working for system testing and certification with e.g. Lloyd's Register of Shipping, Det Norske Veritas (DNV), Germanischer Lloyd, Bureau Veritas, American Bureau of Shipping (ABS), RINA, Korean standard.

References
Over the last 30 years Eaton has had the pleasure to work with top shipping companies and ship builders. Our list of references includes UPS deliveries for a wide range of vessels from cruise liners and ferries to ice breakers; from LNG carriers and cable ships to oil rigs.

Services
Eaton's global service network comprises more than 1,200 service professionals worldwide. They make sure you get the same high quality services wherever you operate, delivered by your local Eaton Authorised Service Provider. We are available for our customers in all main ports around the world.

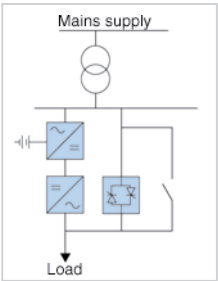

Picture 1. Online UPS

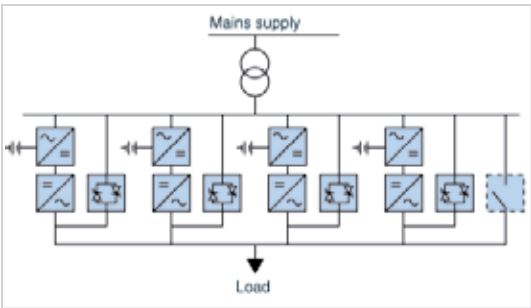

Picture 2. Parallel redundant system

Offshore and marine offering highlights

Powerware 9390M

Power range 60–160 kVA

- Double conversion online technology
- Three-phase input and output
- Hot Sync parallel redundant systems up to 4 parallel
- Typical applications: emergency lighting, computers

Powerware 9355M

Power range 20–40 kVA

- Three-phase input and output
- Hot Sync parallel redundant systems high-nines reliability
- Typical applications: cash registers, computers, casino, emergency P.A.
- Audio-visual equipment
- Bridge equipment

Powerware 9155/9355M

Power range 8-15 kVA

- Double conversion online technology
- Single-phase in/output
- Three-phase input/single-phase output
- Three-phase input and output
- Hot Sync parallel redundant systems up to 4 on parallel
- Typical applications: navigation, communications, automation

In addition, a number of battery and transformer options, power distribution panels and other optional devices can be delivered in external battery & option cabinets.

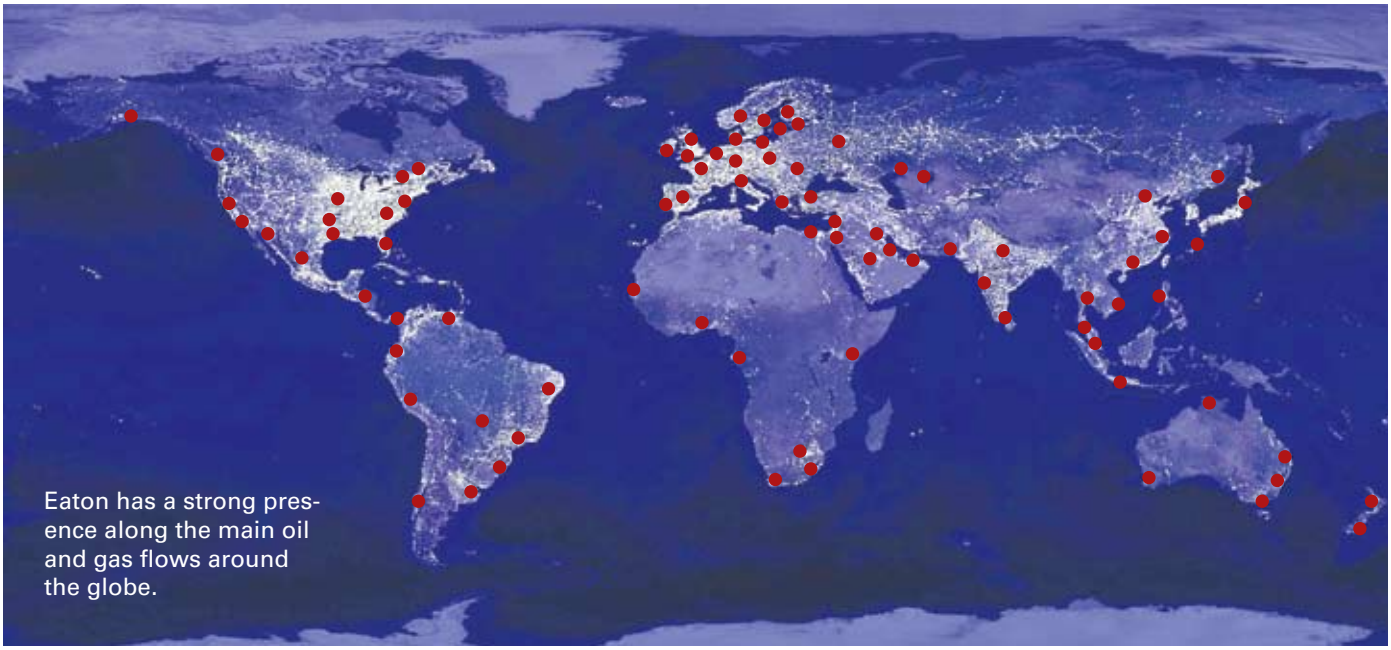

Eaton has a strong presence along the main oil and gas flows around the globe.

About Powerware Solutions

Eaton's Powerware solutions provide the confidence that power problems will not disrupt your systems, data, and operation, delivered through more than 40 years of solid performance, in-depth knowledge of customer applications, continuous innovations and world-class services. Powerware solutions have been recognised by UPS users and industry experts for delivering highest customer value and satisfaction, as well as for demonstrating most insight into customer needs among all UPS vendors.

Powerware UPSs are ranked number 1 in medium range and large UPSs above 5 kVA and number two in small system UPSs at or below 5 kVA. Loyal customers range from home office users to leading blue-chip IT equipment providers, the largest global telecommunications companies, Fortune 100 business, and government agencies.

EUROPE/MIDDLE EAST/ AFRICA LOCATIONS

DENMARK
Østmarken 9
DK-2860 Søborg
Tel. +45 3686 7910

FINLAND
Koskelontie 13
FIN-02920 Espoo
Tel. +358-9-452 661

FRANCE
ZAC des Delâches
BP 1077
GOMETZ-LE-CHATEL
F-91940 Les Ulis
Tel. +33-1-60 12 74 00

NORWAY
Rosenholmveien 25
1410 Kolbotn
Tel. +47 23 03 65 50

ITALY
Via Pellizza da Volpedo, 53
I-20092 Cinisello Balsamo
Milano
Tel. +39-02-66 04 05 40

GERMANY
Karl-Bold Strasse 40
D-77855 Achern
Tel. +49 7841 604 0

POLAND
93/105 Chrościckiego Str
02-414 Warsaw
Tel. +48 22 331 85 24

RUSSIA
Electrozavodskaya str. 33, building 4
107076 Moscow
Tel. +7 095 981 37 70

SWEDEN
Sågvägen 2
S-184 25 Åkersberga
Tel. +46-8-598 940 00

UNITED KINGDOM
221 Dover Road
Slough SL1 4RF
Berkshire
Tel. +44-1753-608 700

AMERICAS

UNITED STATES
World headquarters
8609 Six Forks Road
Raleigh, NC 27615
Tel. +1 919 872 3020

5847 San Felipe – Suite 1700
Houston, TX 77057
Tel. +1 713 821 1461

ARGENTINA
Belgrano 768
5th PISO
Buenos Aires 1092
Tel. +54 11 4343 6323

CANADA
380 Carlingview Drive
M9W 5X9
Toronto, Ontario
Tel. +1 800 461 798 0112

BRAZIL
Av. Ermano Marchetti 1435
Agua Branca
05038-001 Sao Paulo
Tel. +55 11 3616 8503

ASIA PACIFIC

AUSTRALIA
10 kent Road
Mascot NSW 2020
Sydney 2113 NSW
Tel. +61-2-9693 9366

CHINA
Floor 22-22A, Harbour Ring Huangpu Center
98 Liu He Road
Shanghai 200001
PR China
Tel. +86 21 6361 5599

HONG KONG
Room 11, 18/F, Kodak House II
38-39 Healthy Street East
North Point
Tel: +852 2745 6682

INDIA
4, Community Centre
Panchsheel Park
New Delhi 110017
Tel. +91 11 2649 9414 to 18

SINGAPORE
15 Changi Business Park
Central 1
Singapore 486057
Tel. +65 6829 8888

Powerware, Cutler-Hammer, Durant, Heinemann, Holec and MEM are trade names, trademarks, and/or service marks of Eaton Corporation or its subsidiaries and affiliates. © 2005 Eaton Corporation.

Printed in Finland
1017037-D 9/2006
September 2006

EATON | Powerware