Powerware Series

Eaton® 9395 Maintenance Bypass Module
275 kVA and 550 kVA
Installation and Operation Manual

Powering Business Worldwide

Powerware Series

Eaton® 9395 Maintenance Bypass Module
275 kVA and 550 kVA
Installation and Operation Manual

Powering Business Worldwide

IMPORTANT SAFETY INSTRUCTIONS
SAVE THESE INSTRUCTIONS

This manual contains important instructions that you should follow during installation and maintenance of the UPS and batteries. Please read all instructions before operating the equipment and save this manual for future reference.

CONSIGNES DE SÉCURITÉ IMPORTANTES
CONSERVER CES INSTRUCTIONS

Ce manuel comporte des instructions importantes que vous êtes invité à suivre lors de toute procédure d'installation et de maintenance des batteries et de l'onduleur. Veuillez consulter entièrement ces instructions avant de faire fonctionner l'équipement et conserver ce manuel afin de pouvoir vous y reporter ultérieurement.

WARNING

This is a product for restricted sales distribution to informed partners (EN/IEC 62040-2). Installation restrictions or additional measures may be needed to prevent electromagnetic disturbances.

Eaton and Powerware are registered trademarks of Eaton Corporation or its subsidiaries and affiliates. KIRK is a registered trademark of Kirk Key Interlock Company LLC. National Electrical Code and NEC are registered trademarks of National Fire Protection Association, Inc. All other trademarks are property of their respective companies.

©Copyright 2008–2010 Eaton Corporation, Raleigh, NC, USA. All rights reserved. No part of this document may be reproduced in any way without the express written approval of Eaton Corporation.

Table of Contents

1 Introduction 1-1

1.1 MBM Standard Features 1-1
1.1.1 Installation Features 1-1
1.1.2 Maintenance Bypass Breaker 1-1
1.1.3 Maintenance Isolation Breaker 1-1
1.1.4 Customer Interface 1-1
1.1.5 Expansion 1-1
1.2 Options and Accessories 1-2
1.2.1 Bypass Input Breaker 1-2
1.2.2 Rectifier Input Breaker 1-2
1.2.3 Kirk Key Interlocks 1-2
1.3 Basic System Configurations 1-3
1.4 Using This Manual 1-3
1.5 Conventions Used in This Manual 1-3
1.6 Symbols, Controls, and Indicators 1-4
1.7 For More Information 1-4
1.8 Getting Help 1-5

2 Safety Warnings 2-1

Section I – Installation

3 MBM Installation Plan and Unpacking 3-1

3.1 Creating an Installation Plan 3-1
3.2 Preparing the Site 3-1
3.2.1 Environmental and Installation Considerations. 3-1
3.2.2 MBM Power Wiring Preparation 3-5
3.2.3 MBM Interface Wiring Preparation. 3-13
3.3 Inspecting and Unpacking the MBM Cabinet 3-13

4 MBM Installation 4-1

4.1 Preliminary Installation Information 4-1
4.2 Unloading the MBM Cabinet from the Pallet 4-1
4.3 MBM Installation 4-3
4.3.1 Line-up-and-Match Cabinet Installation 4-4
4.3.2 Line-up-and-Match Power Wiring Installation 4-7
4.3.3 Line-up-and-Match TB1 Interface Wiring Installation 4-15
4.3.4 Standalone Cabinet Installation 4-19
4.3.5 Standalone Power Wiring Installation. 4-21
4.3.6 Standalone TB1 Interface Wiring Installation 4-23
4.3.7 MBP, MIS, BIB, and RIB Current Settings 4-24
4.4 Initial Startup 4-24
4.5 Completing the Installation Checklist 4-25

Section II – Operation

5 Understanding MBM Operation 5-1

5.1 MBM with Electrical Interlocks 5-1
5.2 MBM with Mechanical (Kirk Key) Interlocks 5-1
5.3 Normal Mode Current Flow 5-2
5.4 Maintenance Bypass Mode Current Flow 5-3
5.5 MBM Oneline Configurations 5-4

6 MBM Operating Instructions 6-1

6.1 MBM Controls and Indicators 6-1
6.2 Using the UPS when an MBM is Installed 6-1
6.3 MBM Operation – Electrical Interlock 6-6
6.3.1 Transferring the UPS to Maintenance Bypass 6-6
6.3.2 Transferring the UPS from Maintenance Bypass 6-7
6.4 MBM Operation – Kirk Key (Mechanical) Interlock 6-7
6.4.1 Transferring the UPS to Maintenance Bypass 6-7
6.4.2 Transferring the UPS from Maintenance Bypass 6-8

7 MBM Maintenance 7-1

7.1 Important Safety Instructions 7-1
7.2 Performing Preventive Maintenance 7-1
7.2.1 DAILY Maintenance 7-1
7.2.2 PERIODIC Maintenance 7-1
7.2.3 ANNUAL Maintenance 7-2
7.3 Short Circuits 7-2
7.4 Recycling the Used MBM 7-2
7.5 Maintenance Training 7-2

8 Product Specifications 8-1

8.1 Model Numbers 8-1
8.2 Specifications 8-1
8.2.1 MBM Input 8-1
8.2.2 MBM Output 8-1
8.2.3 MBM Environmental 8-1

Warranty W-1

List of Figures

Figure 1-1. Eaton 9395 MBM 1-2
Figure 3-1. MBM Cabinet Dimensions (Front View) 3-3
Figure 3-2. MBM Cabinet Dimensions (Right Side View) 3-3
Figure 3-3. MBM Cabinet Dimensions (Top View) 3-4
Figure 3-4. MBM Cabinet Dimensions (Bottom View) 3-4
Figure 3-5. Eaton 9395 MBM Cabinet as Shipped on Pallet 3-14
Figure 4-1. Removing the Left Side Shipping Bracket 4-2
Figure 4-2. Removing the Right Side Shipping Bracket 4-3
Figure 4-3. Line-up-and-Match MBM with a Eaton 9395 225–275 kVA UPS 4-5
Figure 4-4. Line-up-and-Match MBM with a Eaton 9395 450–550 kVA UPS 4-5
Figure 4-5. UPS Left Side View 4-6
Figure 4-6. MBM Cabinet Right Side View 4-6
Figure 4-7. MBM to Eaton 9395 UPS Joining Brackets 4-7
Figure 4-8. Conduit and Wire Entry Locations 4-10
Figure 4-9. 9395 275 kVA MBM Power Terminal Locations 4-11
Figure 4-10. 9395 275 kVA MBM Power Terminal Detail – Right Side View 4-12
Figure 4-11. 9395 550 kVA MBM Power Terminal Locations 4-13
Figure 4-12. 9395 550 kVA MBM Power Terminal Detail – Right Side View 4-14
Figure 4-13. Interface Terminal Locations 4-17
Figure 4-14. Terminal Blocks TB1 and TB2 Connector Assignments 4-17
Figure 4-15. MBM Interface Wiring 4-18
Figure 4-16. Standalone MBM with a Eaton 9395 225–275 kVA UPS 4-20
Figure 4-17. Standalone MBM with a Eaton 9395 450–550 kVA UPS 4-20
Figure 5-1. Path of Current Through the MBM in UPS Mode 5-2
Figure 5-2. Path of Current Through the MBM in Maintenance Bypass Mode 5-3
Figure 5-3. Eaton 9395 MBM without BIB or RIB 5-5
Figure 5-4. Eaton 9395 MBM with BIB – Dual-Feed UPS 5-6
Figure 5-5. Eaton 9395 MBM with BIB – Single-Feed UPS 5-7
Figure 5-6. Eaton 9395 MBM with BIB and RIB 5-8
Figure 6-1. Eaton 9395 275 kVA MBM Controls and Indicators (Electrical Interlock) 6-2
Figure 6-2. Eaton 9395 275 kVA MBM Controls and Indicators (Kirk Key Interlock) 6-3
Figure 6-3. Eaton 9395 550 kVA MBM Controls and Indicators (Electrical Interlock) 6-4
Figure 6-4. Eaton 9395 550 kVA MBM Controls and Indicators (Kirk Key Interlock) 6-5

This page intentionally left blank.

Chapter 1 Introduction

The Eaton® 9395 Maintenance Bypass Module (MBM) is designed for use with the Eaton 9395 225–550 kVA three-phase uninterruptible power supplies. The MBM enables power to completely bypass and isolate the UPS so that the UPS can be safely serviced or replaced without interrupting power to critical systems.

The MBM is housed in a single, free-standing cabinet with safety shields behind the doors for hazardous voltage protection. The cabinet matches the UPS cabinets in style and color. Figure 1-1 shows the Eaton 9395 MBM.

NOTE *Startup and operational checks must be performed by an authorized Eaton Customer Service Engineer, or the warranty terms specified on page NO TAG become void. This service is offered as part of the sales contract for the UPS system. Contact an Eaton service representative in advance (usually a two-week notice is required) to reserve a preferred startup date.*

1.1 MBM Standard Features

The MBM has many standard features that provide cost-effective and consistently reliable power protection. The descriptions in this section provide a brief overview of the MBM standard features.

1.1.1 Installation Features

The MBM can be installed in a *line-up-and-match* or *standalone* configuration and the cabinet can be permanently bolted to the floor.

Power and control wiring can be routed through the top or bottom of the cabinet with connections made to easily accessible terminals. External sensing and monitoring control wire must be installed in accordance with Class 1 wiring methods.

1.1.2 Maintenance Bypass Breaker

An electrically controlled interlock maintenance bypass breaker (MBP) transfers the load from the UPS output to the bypass input feeder.

1.1.3 Maintenance Isolation Breaker

An electrically controlled interlock maintenance isolation breaker (MIS) isolates the UPS from the bypass feed and the load.

1.1.4 Customer Interface

The MBM uses UPS building alarm inputs for MBP monitoring. One alarm input will detect when the MBP is closed and the system is on bypass.

1.1.5 Expansion

The MBM supports custom configurations and scalability to adapt to changing and future power and distribution needs. See paragraph 1.2 for available options.

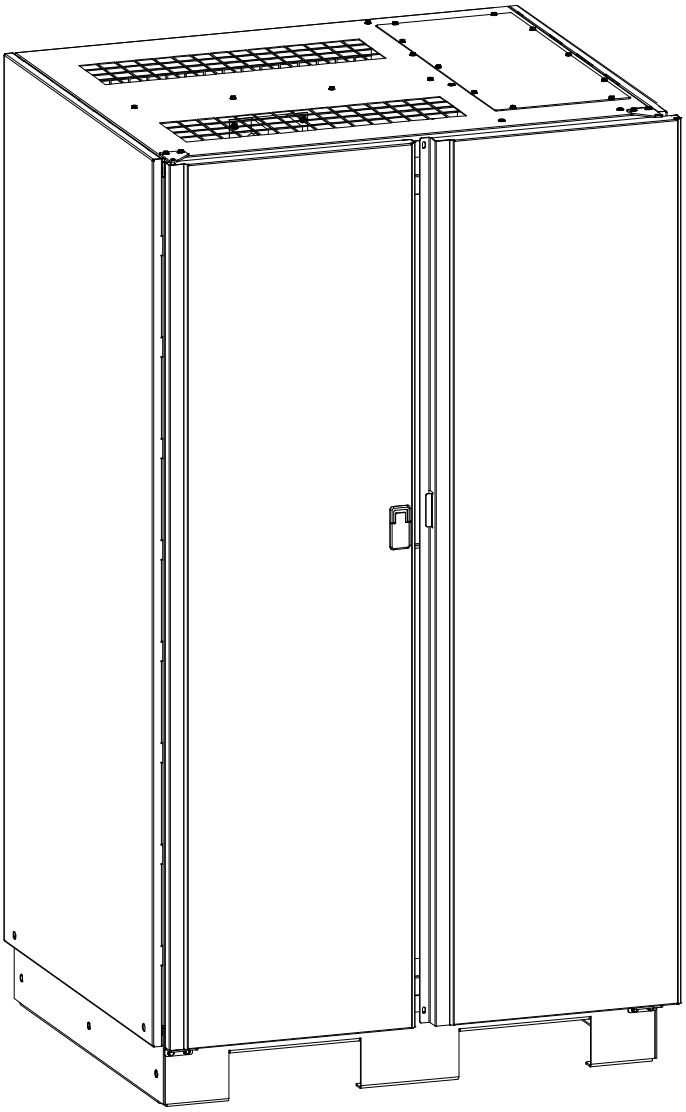

Figure 1-1. Eaton 9395 MBM

1.2 Options and Accessories

Contact an Eaton sales representative for information about the following options.

1.2.1 Bypass Input Breaker

An optional bypass input breaker (BIB) provides a single point of input power control to the UPS and easily removes power from the UPS for servicing.

1.2.2 Rectifier Input Breaker

An optional rectifier input breaker (RIB) provides a single point of rectifier input power control to the UPS and easily removes power from the UPS for servicing.

1.2.3 Kirk Key Interlocks

Kirk key interlocks are available for the MBP and MIS to provide a secure mechanical method of preventing accidental or unauthorized bypass transfer.

1.3 Basic System Configurations

The following basic MBM configurations are possible:

- MBM with MBP and MIS
- MBM with MBP, MIS, and BIB
- MBM with MBP, MIS, BIB, and RIB

1.4 Using This Manual

This manual describes how to install and operate the Eaton 9395 MBM. Read and understand the procedures described in this manual to ensure trouble-free installation and operation.

The information in this manual is divided into sections and chapters. The system, options, and accessories being installed dictate which parts of this manual should be read. At a minimum, Chapters 1 through 4 and Chapter 6 should be examined.

Read through each procedure before beginning the procedure. Perform only those procedures that apply to the MBM being installed or operated.

1.5 Conventions Used in This Manual

This manual uses these type conventions:

- **Bold type** highlights important concepts in discussions, key terms in procedures, and menu options, or represents a command or option that you type or enter at a prompt.
- *Italic type* highlights notes and new terms where they are defined.
- **`Screen type`** represents information that appears on the screen or LCD.

Icon	Description
	Information notes call attention to important features or instructions.
[Keys]	Brackets are used when referring to a specific key, such as [Enter] or [Ctrl].

In this manual, the term MBM refers only to the MBM cabinet and its internal elements. The term UPS refers only to the UPS cabinet and its internal elements The term *UPS system* refers to the entire power protection system – the UPS cabinet, the battery cabinet, and options or accessories installed.

1.6 Symbols, Controls, and Indicators

The following are examples of symbols used on the MBM or accessories to alert you to important information:

RISK OF ELECTRIC SHOCK - Observe the warning associated with the risk of electric shock symbol.

CAUTION: REFER TO OPERATOR'S MANUAL - Refer to your operator's manual for additional information, such as important operating and maintenance instructions.

This symbol indicates that you should not discard waste electrical or electronic equipment (WEEE) in the trash. For proper disposal, contact your local recycling/reuse or hazardous waste center.

1.7 For More Information

Refer to the *Eaton 9395 UPS (225–275 kVA) Installation and Operation* manual, the *Eaton 9395 Plus 1 UPS (225–275 kVA) Installation and Operation* manual, the *Eaton 9395 550/275 UPS (225–550 kVA) Installation and Operation* manual, or the *Eaton 9395 UPS (450–550 kVA) Installation and Operation* manual for the following additional information:

- UPS, optional components, and accessory installation instructions, including site preparation, planning for installation, and wiring and safety information. Detailed illustrations of cabinets and optional accessories with dimensional and connection point drawings are provided.
- UPS operation, including UPS controls, functions of the UPS, standard features and optional accessories, procedures for starting and stopping the UPS, and information about maintenance and responding to system events.
- Communication capabilities of the UPS system.

Visit www.eaton.com/powerquality or contact an Eaton service representative for information on how to obtain copies of these manuals.

1.8 Getting Help

If help is needed with any of the following:

- Scheduling initial startup
- Regional locations and telephone numbers
- A question about any of the information in this manual
- A question this manual does not answer

Please call the Help Desk at:

United States:	1-800-843-9433 or 1-919-870-3028
Canada:	1-800-461-9166 ext 260
All other countries:	Call your local service representative

This page intentionally left blank.

Chapter 2 Safety Warnings

IMPORTANT SAFETY INSTRUCTIONS
SAVE THESE INSTRUCTIONS

This manual contains important instructions that should be followed during installation and maintenance of the MBM. Read all instructions before operating the equipment and save this manual for future reference.

The MBM cabinet is designed for industrial or computer room applications, and contains safety shields behind the doors. However, the UPS system is a sophisticated power system and should be handled with appropriate care.

DANGER

This UPS system contains **LETHAL VOLTAGES**. All repairs and service should be performed by **AUTHORIZED SERVICE PERSONNEL ONLY**. There are **NO USER SERVICEABLE PARTS** inside the MBM.

WARNING

- The UPS system contains its own energy source (batteries). The output terminals may carry live voltage even when the UPS is disconnected from an AC source.
- To reduce the risk of fire or electric shock, install this MBM in a temperature and humidity controlled, indoor environment, free of conductive contaminants. Ambient temperature must not exceed 40°C (104°F). Do not operate near water or excessive humidity (95% maximum). The system is not intended for outdoor use.
- Ensure all power is disconnected before performing installation or service.
- ELECTRIC ENERGY HAZARD. Do not attempt to alter any wiring or connectors. Attempting to alter wiring can cause injury.

CAUTION

- Installation or servicing should be performed by qualified service personnel.
- Keep the MBM doors closed to ensure proper cooling airflow and to protect personnel from dangerous voltages inside the unit.
- Do not install or operate the UPS system close to gas or electric heat sources.
- The operating environment should be maintained within the parameters stated in this manual.
- Keep surroundings uncluttered, clean, and free from excess moisture.
- Observe all DANGER, CAUTION, and WARNING notices affixed to the inside and outside of the equipment.

This page intentionally left blank.

Section I
Installation

Chapter 3 MBM Installation Plan and Unpacking

Use the following basic sequence of steps to install the Maintenance Bypass Module (MBM):

1. Create an installation plan for the MBM (Chapter 3).
2. Prepare your site for the MBM (Chapter 3).
3. Inspect and unpack the MBM cabinet (Chapter 3).
4. Unload and install the MBM cabinet, and wire the system (Chapter 4).
5. Complete the Installation Checklist (Chapter 4).
6. Have authorized service personnel perform preliminary operational checks and start up the system.

NOTE *Startup and operational checks must be performed by an authorized Eaton Customer Service Engineer, or the warranty terms specified on page NO TAG become void. This service is offered as part of the sales contract for the UPS system. Contact an Eaton service representative in advance (usually a two-week notice is required) to reserve a preferred startup date.*

3.1 Creating an Installation Plan

Before installing the MBM, read and understand how this manual applies to the system being installed. Use the procedures and illustrations in paragraph 3.2 and Chapter 4 to create a logical plan for installing the system.

3.2 Preparing the Site

For the MBM to operate at peak efficiency, the installation site should meet the environmental parameters outlined in this manual. If the MBM is to be operated at an altitude higher than 1500m (5000 ft), contact an Eaton service representative for important information about high altitude operation. The operating environment must meet the weight, clearance, and environmental requirements specified.

3.2.1 Environmental and Installation Considerations

The MBM installation must meet the following guidelines:

- The system must be installed on a level floor suitable for computer or electronic equipment.
- The system must be installed in a temperature and humidity controlled indoor area free of conductive contaminants.
- The cabinet can be installed in *line-up-and-match* or *standalone* configurations.

Failure to follow guidelines may void your warranty.

The UPS equipment operating environment must meet the weight requirements shown in Table 3-1 and the size requirements shown in Figure 3-1 through Figure 3-4. Dimensions are in millimeters (inches).

Table 3-1. MBM Cabinet Weights

Model	Weight kg (lb)			
	Shipping		Installed	
	Standalone	Line-up-and-Match	Standalone	Line-up-and-Match
Eaton 9395 275 kVA MBM	363 (800)	377 (830)	336 (740)	349 (770)
Eaton 9395 275 kVA MBM with BIB	379 (835)	401 (885)	352 (775)	374 (825)
Eaton 9395 275 kVA MBM with BIB and RIB	395 (870)	426 (940)	367 (810)	399 (880)
Eaton 9395 550 kVA MBM	390 (860)	415 (915)	363 (800)	388 (855)
Eaton 9395 550 kVA MBM with BIB	420 (925)	463 (1020)	392 (865)	435 (960)
Eaton 9395 550 kVA MBM with BIB and RIB	449 (990)	513 (1130)	422 (930)	485 (1070)

The MBM cabinet uses convection air cooling to regulate internal component temperature. Air outlets are in the top of the cabinet. Allow clearance above the cabinet for proper air circulation. The clearances required around the MBM cabinet are shown in Table 3-2.

Table 3-2. UPS Cabinet Clearances

From Top of Cabinet	457.2 mm (18″) minimum clearance for ventilation
From Front of Cabinet	914.4 mm (36″) working space
From Back of Cabinet	None Required
From Right Side of Cabinet	None Required
From Left Side of Cabinet	None Required

The basic environmental requirements for operation of the MBM are:

- Ambient Temperature Range: 0–40°C (32–104°F)
- Recommended Operating Range: 20–25°C (68–77°F)
- Maximum Relative Humidity: 95%, noncondensing

The MBM ventilation requirements are shown in Table 3-3.

Table 3-3. Air Conditioning or Ventilation Requirements During Full Load Operation

Rating	Input/Output Voltage	Heat Rejection BTU/hr × 1000/hr (kg-cal/hr)	Ventilation Required for Cooling Air Exhaust
275 kVA	480/480	N/A	N/A
550 kVA	480/480	N/A	

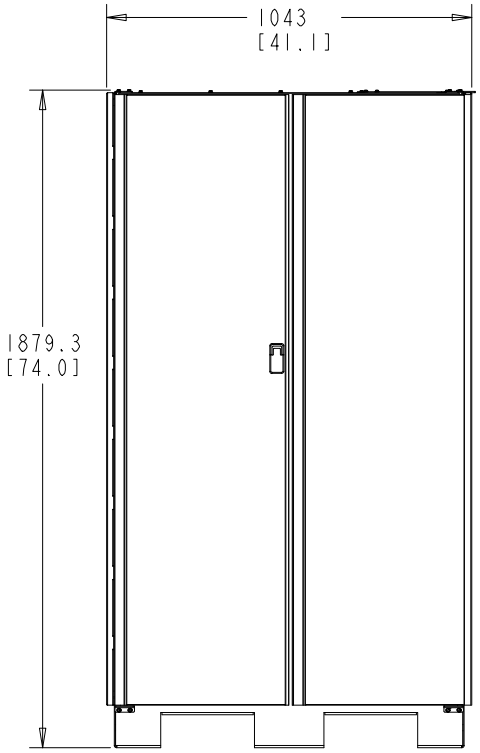

Dimensions are in millimeters [inches].

Figure 3-1. MBM Cabinet Dimensions (Front View)

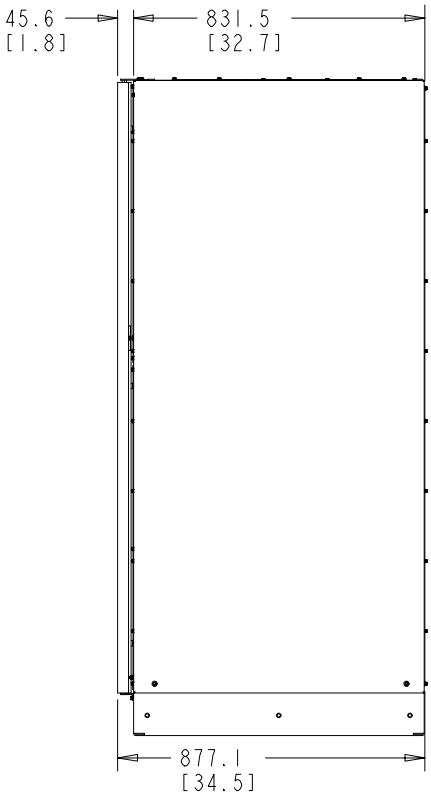

Dimensions are in millimeters [inches].

Figure 3-2. MBM Cabinet Dimensions (Right Side View)

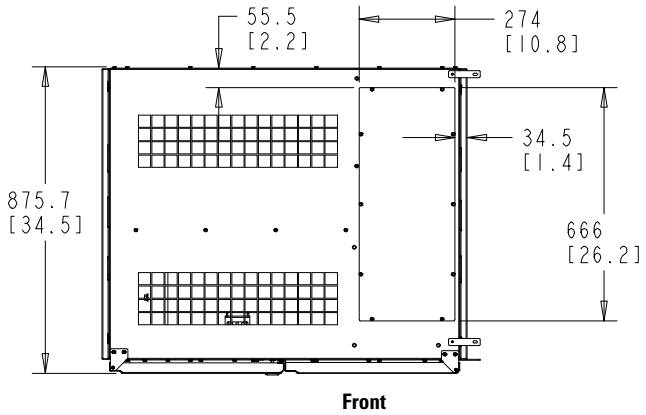

Dimensions are in millimeters [inches].

Figure 3-3. MBM Cabinet Dimensions (Top View)

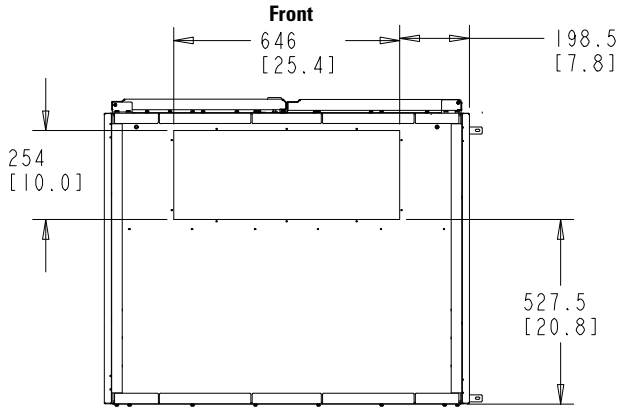

Dimensions are in millimeters [inches].

Figure 3-4. MBM Cabinet Dimensions (Bottom View)

3.2.2 MBM Power Wiring Preparation

Read and understand the following notes while planning and performing the installation:

- Refer to national and local electrical codes for acceptable external wiring practices.
- For external wiring, use 90°C copper wire. If wire is run in an ambient temperature greater than 30°C, higher temperature wire and/or larger size wire may be necessary. Wire sizes are based on using the specified breakers.
- Wire ampacities are chosen from Table 310-16 of the NEC. Wire is 90°C specification.
- Per NEC article 300,3(B)(1), all three-phase conductors must be run in the same conduit. Neutral and ground must be run in the same conduit as the phase conductors. Size conduit to accommodate one neutral conductor the same size as the phase conductor and one ground conductor sized in accordance with NEC Table 250.122.
- Material and labor for external wiring requirements are to be provided by designated personnel.
- Refer to the applicable Eaton 9395 UPS Installation and Operation manual listed in paragraph 1.7 on page 1-4 for UPS cabinet wiring requirements, and conduit and terminal locations.
- When installing an MBM, a minimum of two separate feeds with upstream feeder breakers, or a single feed with two upstream feeder breakers, must be provided: one for the UPS and one for the maintenance bypass input. DO NOT use a single feed or a single feeder breaker to supply both the UPS and the maintenance bypass. If a bypass input breaker (BIB) is installed in the MBM and a single-feed UPS is being installed, a single feed to the maintenance bypass is acceptable for supplying both the UPS and the bypass. If a rectifier input breaker (RIB) and a bypass input breaker (BIB) are installed in the MBM, a single feed to the maintenance bypass is acceptable for supplying both the UPS and the maintenance bypass.
- The bypass feed into this equipment uses three or four wires.
- If the load requires a neutral, a bypass source neutral must be provided.
- The MBM cabinet is shipped with a debris shield covering the ventilation grill on top of the unit. Do not remove the debris shield until installation is complete. However, remove the shield before operating the MBM. Once the debris shield is removed, do not place objects on the ventilation grill.

For external wiring requirements, including the minimum AWG size of external wiring, see Table 3-4 and Table 3-5 for the 9395 275 kVA MBM or Table 3-6 and Table 3-7 for the 9395 550 kVA MBM.

Table 3-4. Input/Output Ratings and External Wiring Requirements for the Eaton 9395 275 kVA MBM with Four Wire Bypass Input

Basic Unit Rating		**Units**	**UPS Rating 50/60 Hz**	
		kVA	225	275
Input and Output Voltage		Volts	480/480	480/480
AC Input to Maintenance Bypass with or without Optional BIB (dual-feed UPS) (3) Phases, (1) Ground	**A**	Amps	271	331
Minimum Conductor Size Number per Phase		AWG or kcmil (each)	2/0 (2)	4/0 (2)
AC Input to Maintenance Bypass with Optional BIB (single-feed UPS) (3) Phases, (1) Ground	**A**	Amps	300	370
Minimum Conductor Size Number per Phase		AWG or kcmil (each)	2/0 (2)	4/0 (2)
AC Input to Maintenance Bypass with Optional BIB and RIB (dual-feed UPS) (3) Phases, (1) Ground	**A**	Amps	300	370
Minimum Conductor Size Number per Phase		AWG or kcmil (each)	2/0 (2)	4/0 (2)
AC Output from Optional RIB to UPS (3) Phases, (1) Ground	**B**	Amps	300	370
Minimum Conductor Size Number per Phase		AWG or kcmil (each)	2/0 (2)	4/0 (2)
AC Output from Optional BIB to UPS (3) Phases, (1) Ground	**C**	Amps	271	331
Minimum Conductor Size Number per Phase		AWG or kcmil (each)	2/0 (2)	4/0 (2)
AC Input from UPS to MIS (3) Phases, (1) Ground	**D**	Amps	271	331
Minimum Conductor Size Number per Phase		AWG or kcmil (each)	2/0 (2)	4/0 (2)
AC Output to Critical Load (3) Phases, (1) Ground	**E**	Amps	271	331
Minimum Conductor Size Number per Phase		AWG or kcmil (each)	2/0 (2)	4/0 (2)

NOTE Callout letters **A**, **B**, **C**, **D** and **E** map to Figure 5-3 on page 5-5, Figure 5-4 on page 5-6, Figure 5-5 on page 5-7, and Figure 5-6 on page 5-8.

Table 3-5. Input/Output Ratings and External Wiring Requirements for the Eaton 9395 275 kVA MBM with Five Wire Bypass Input

Basic Unit Rating		Units	UPS Rating 50/60 Hz	
		kVA	225	275
Input and Output Voltage		Volts	480/480	480/480
AC Input to Maintenance Bypass with or without Optional BIB (dual-feed UPS) (3) Phases, (1) Neutral, (1) Ground	**A**	Amps	271	331
Minimum Conductor Size Number per Phase		AWG or kcmil (each)	3/0 (2)	250 (2)
AC Input to Maintenance Bypass with Optional BIB (single-feed UPS) (3) Phases, (1) Neutral, (1) Ground	**A**	Amps	300	370
Minimum Conductor Size Number per Phase		AWG or kcmil (each)	3/0 (2)	250 (2)
AC Input to Maintenance Bypass with Optional BIB and RIB (dual-feed UPS) (3) Phases, (1) Neutral, (1) Ground	**A**	Amps	300	370
Minimum Conductor Size Number per Phase		AWG or kcmil (each)	3/0 (2)	250 (2)
AC Output from Optional RIB to UPS (3) Phases, (1) Ground	**B**	Amps	300	370
Minimum Conductor Size Number per Phase		AWG or kcmil (each)	2/0 (2)	4/0 (2)
AC Output from Optional BIB to UPS (3) Phases, (1) Neutral, (1) Ground	**C**	Amps	271	331
Minimum Conductor Size Number per Phase		AWG or kcmil (each)	3/0 (2)	250 (2)
AC Input from UPS t o MIS (3) Phases, (1) Neutral, (1) Ground	**D**	Amps	271	331
Minimum Conductor Size Number per Phase		AWG or kcmil (each)	3/0 (2)	250 (2)
AC Output to Critical Load (3) Phases, (1) Neutral, (1) Ground	**E**	Amps	271	331
Minimum Conductor Size Number per Phase		AWG or kcmil (each)	3/0 (2)	250 (2)

NOTE Callout letters **A**, **B**, **C**, **D** and **E** map to Figure 5-3 on page 5-5, Figure 5-4 on page 5-6, Figure 5-5 on page 5-7, and Figure 5-6 on page 5-8.

Table 3-6. Input/Output Ratings and External Wiring Requirements for the Eaton 9395 550 kVA MBM with Four Wire Bypass Input

Basic Unit Rating		Units	UPS Rating 50/60 Hz		
		kVA	450	500	550
Input and Output Voltage		Volts	480/480	480/480	480/480
AC Input to Maintenance Bypass with or without Optional BIB (dual-feed UPS) (3) Phases, (1) Ground	**A**	Amps	541	601	662
Minimum Conductor Size Number per Phase		AWG or kcmil (each)	4/0 (3)	4/0 (3)	350 (3)
AC Input to Maintenance Bypass with Optional BIB (single-feed UPS) (3) Phases, (1) Ground	**A**	Amps	600	660	740
Minimum Conductor Size Number per Phase		AWG or kcmil (each)	4/0 (3)	350 (3)	350 (3)
AC Input to Maintenance Bypass with Optional BIB and RIB (dual-feed UPS) (3) Phases, (1) Ground	**A**	Amps	600	660	740
Minimum Conductor Size Number per Phase		AWG or kcmil (each)	4/0 (3)	350 (3)	350 (3)
AC Output from Optional RIB to UPS (3) Phases, (1) Ground	**B**	Amps	600	660	740
Minimum Conductor Size Number per Phase		AWG or kcmil (each)	4/0 (3)	350 (3)	350 (3)
AC Output from Optional BIB to UPS (3) Phases, (1) Ground	**C**	Amps	541	601	662
Minimum Conductor Size Number per Phase		AWG or kcmil (each)	4/0 (3)	4/0 (3)	350 (3)
AC Input from UPS to MIS (3) Phases, (1) Ground	**D**	Amps	541	601	662
Minimum Conductor Size Number per Phase		AWG or kcmil (each)	4/0 (3)	4/0 (3)	350 (3)
AC Output to Critical Load (3) Phases, (1) Ground	**E**	Amps	541	601	662
Minimum Conductor Size Number per Phase		AWG or kcmil (each)	4/0 (3)	4/0 (3)	350 (3)

NOTE Callout letters **A**, **B**, **C**, **D** and **E** map to Figure 5-3 on page 5-5, Figure 5-4 on page 5-6, Figure 5-5 on page 5-7, and Figure 5-6 on page 5-8.

Table 3-7. Input/Output Ratings and External Wiring Requirements for the Eaton 9395 550 kVA MBM with Five Wire Bypass Input

Basic Unit Rating		Units	UPS Rating 50/60 Hz		
		kVA	450	500	550
Input and Output Voltage		Volts	480/480	480/480	480/480
AC Input to Maintenance Bypass with or without Optional BIB (dual-feed UPS) (3) Phases, (1) Neutral, (1) Ground	**A**	Amps	541	601	662
Minimum Conductor Size Number per Phase		AWG or kcmil (each)	250 (3)	300 (3)	300 (4)
AC Input to Maintenance Bypass with Optional BIB (single-feed UPS) (3) Phases, (1) Neutral, (1) Ground	**A**	Amps	600	660	740
Minimum Conductor Size Number per Phase		AWG or kcmil (each)	250 (3)	300 (3)	300 (4)
AC Input to Maintenance Bypass with Optional BIB and RIB (dual-feed UPS) (3) Phases, (1) Neutral, (1) Ground	**A**	Amps	600	660	740
Minimum Conductor Size Number per Phase		AWG or kcmil (each)	250 (3)	300 (3)	300 (4)
AC Output from Optional RIB to UPS (3) Phases, (1) Ground	**B**	Amps	600	660	740
Minimum Conductor Size Number per Phase		AWG or kcmil (each)	4/0 (3)	350 (3)	350 (3)
AC Output from Optional BIB to UPS (3) Phases, (1) Neutral, (1) Ground	**C**	Amps	541	601	662
Minimum Conductor Size Number per Phase		AWG or kcmil (each)	250 (3)	300 (3)	300 (4)
AC Input from UPS to MIS (3) Phases, (1) Neutral, (1) Ground	**D**	Amps	541	601	662
Minimum Conductor Size Number per Phase		AWG or kcmil (each)	250 (3)	300 (3)	300 (4)
AC Output to Critical Load (3) Phases, (1) Neutral, (1) Ground	**E**	Amps	541	601	662
Minimum Conductor Size Number per Phase		AWG or kcmil (each)	250 (3)	300 (3)	300 (4)

NOTE Callout letters **A**, **B**, **C**, **D** and **E** map to Figure 5-3 on page 5-5, Figure 5-4 on page 5-6, Figure 5-5 on page 5-7, and Figure 5-6 on page 5-8.

The power wiring terminals are compression lugs, UL and CSA rated at 90°C. See Table 3-8 and Table 3-9 for power cable terminations. Figure 4-9 on page 4-11 and Figure 4-10 on page 4-12 show the location of the power cable terminals inside the MBM.

Table 3-8. Power Cable Terminations for the Eaton 9395 275 kVA MBM

Terminal Function	Terminal	Function	Size of Pressure Termination	Tightening Torque Nm (lb in)	Hex Size
AC Input to Maintenance Bypass	E1	Phase A	2 - #6-350 kcmil	31.1 (275)	5/16″ Hex
	E2	Phase B	2 - #6-350 kcmil	31.1 (275)	5/16″ Hex
	E3	Phase C	2 - #6-350 kcmil	31.1 (275)	5/16″ Hex
AC Output from Optional RIB to UPS	RIB-1	Phase A	2 - #2-500 kcmil	42.4 (375)	3/8″ Hex
	RIB-3	Phase B	2 - #2-500 kcmil	42.4 (375)	3/8″ Hex
	RIB-5	Phase C	2 - #2-500 kcmil	42.4 (375)	3/8″ Hex
AC Output from Optional BIB to UPS	BIB-1	Phase A	2 - #2-500 kcmil	42.4 (375)	3/8″ Hex
	BIB-3	Phase B	2 - #2-500 kcmil	42.4 (375)	3/8″ Hex
	BIB-5	Phase C	2 - #2-500 kcmil	42.4 (375)	3/8″ Hex
AC Input from UPS to MIS	MIS-1	Phase A	2 - #2-500 kcmil	42.4 (375)	3/8″ Hex
	MIS-3	Phase B	2 - #2-500 kcmil	42.4 (375)	3/8″ Hex
	MIS-5	Phase C	2 - #2-500 kcmil	42.4 (375)	3/8″ Hex
AC Output to Critical Load	E13	Phase A	2 - #6-350 kcmil	31.1 (275)	5/16″ Hex
	E14	Phase B	2 - #6-350 kcmil	31.1 (275)	5/16″ Hex
	E15	Phase C	2 - #6-350 kcmil	31.1 (275)	5/16″ Hex
Input and Output Neutral	E12	Neutral	12 - #2-600 kcmil	56.5 (500)	1/2″ Hex
Customer Ground	GND	Ground	2 - #6-350 kcmil	31.1 (275)	5/16″ Hex

NOTE Customer ground sized in accordance with NEC Table 250.122.

Table 3-9. Power Cable Terminations for the Eaton 9395 550 kVA MBM

Terminal Function	Terminal	Function	Size of Pressure Termination	Tightening Torque Nm (lb in)	Hex Size
AC Input to Maintenance Bypass	E1	Phase A	4 - #2-600 kcmil	56.5 (500)	1/2″ Hex
	E2	Phase B	4 - #2-600 kcmil	56.5 (500)	1/2″ Hex
	E3	Phase C	4 - #2-600 kcmil	56.5 (500)	1/2″ Hex
AC Output from Optional RIB to UPS	RIB-1	Phase A	4 - 3/0-400 kcmil	31.1 (275)	5/16″ Hex
	RIB-3	Phase B	4 - 3/0-400 kcmil	31.1 (275)	5/16″ Hex
	RIB-5	Phase C	4 - 3/0-400 kcmil	31.1 (275)	5/16″ Hex
AC Output from Optional BIB to UPS	BIB-1	Phase A	4 - 3/0-400 kcmil	31.1 (275)	5/16″ Hex
	BIB-3	Phase B	4 - 3/0-400 kcmil	31.1 (275)	5/16″ Hex
	BIB-5	Phase C	4 - 3/0-400 kcmil	31.1 (275)	5/16″ Hex
AC Input from UPS to MIS	MIS-1	Phase A	4 - 3/0-400 kcmil	31.1 (275)	5/16″ Hex
	MIS-3	Phase B	4 - 3/0-400 kcmil	31.1 (275)	5/16″ Hex
	MIS-5	Phase C	4 - 3/0-400 kcmil	31.1 (275)	5/16″ Hex
AC Output to Critical Load	E13	Phase A	4 - #2-600 kcmil	56.5 (500)	1/2″ Hex
	E14	Phase B	4 - #2-600 kcmil	56.5 (500)	1/2″ Hex
	E15	Phase C	4 - #2-600 kcmil	56.5 (500)	1/2″ Hex
Input and Output Neutral	E12	Neutral	12 - #2-600 kcmil	56.5 (500)	1/2″ Hex
Customer Ground	GND	Ground	6 - #6-350 kcmil	31.1 (275)	5/16″ Hex

NOTE Customer ground sized in accordance with NEC Table 250.122.

External MBM rectifier and bypass input overcurrent protection is not provided by this product, but is required by codes. Refer to Table 3-4 through Table 3-7 on pages 3-6 through 3-9 for wiring requirements.

Table 3-10 lists the recommended maximum rating for rectifier input circuit breakers and Table 3-11 lists the maximum recommended rating for bypass input circuit breakers.

Table 3-10. Recommended Maximum MBM Rectifier Input Circuit Breaker Ratings

MBM Model	UPS Rating	Input Rating	
		Load Rating	**480V**
Eaton 9395 275 kVA MBM	225 kVA	80% Rated	400A
		100% Rated	350A
	275 kVA	80% Rated	500A
		100% Rated	400A
Eaton 9395 550 kVA MBM	450 kVA	80% Rated	800A
		100% Rated	600A
	500 kVA	80% Rated	1000A
		100% Rated	700A
	550 kVA	80% Rated	1000A
		100% Rated	800A

CAUTION

To reduce the risk of fire, connect only to a circuit provided with maximum input circuit breaker current ratings from Table 3-10 in accordance with the National Electrical Code, ANSI/NFPA 70.

NOTE *Table 3-11 lists the maximum rating for bypass input circuit breakers. When wiring a single-feed UPS input, the rating requirements for the bypass input circuit breakers are superceded by the ratings listed in Table 3-10.*

Table 3-11. Recommended Maximum MBM Bypass Input Circuit Breaker Ratings

MBM Model	UPS Rating	Input Rating	
		Load Rating	**480V**
Eaton 9395 275 kVA MBM	225 kVA	80% Rated	350A
		100% Rated	300A
	275 kVA	80% Rated	450A
		100% Rated	350A
Eaton 9395 550 kVA MBM	450 kVA	80% Rated	700A
		100% Rated	600A
	500 kVA	80% Rated	800A
		100% Rated	700A
	550 kVA	80% Rated	1000A
		100% Rated	700A

3.2.3 MBM Interface Wiring Preparation

Control wiring for features and options should be connected at the customer interface terminal blocks located inside the MBM.

WARNING

Do not directly connect relay contacts to the mains related circuits. Reinforced insulation to the mains is required.

Read and understand the following notes while planning and performing the installation:

- Use Class 1 wiring methods (as defined by the NEC) for interface wiring up to 30V. The wire should be rated at 24V, 1A minimum.
- Use Class 2 wiring methods (as defined by the NEC) for interface wiring from 30 to 600V. The wire should be rated at 600V, 1A minimum and 12 AWG maximum.
- Use twisted-pair wires for each input and return or common.
- All interface wiring and conduit is to be provided by the customer.
- When installing external interface wiring (for example, MBP Aux contacts) to the MBM interface terminals, conduit must be installed between each device and the MBM cabinet.
- Install the interface wiring in separate conduit from the power wiring.

3.3 Inspecting and Unpacking the MBM Cabinet

The MBM cabinet is palleted separately for shipping. The cabinet is shipped bolted to a wooden pallet (see Figure 3-5) and protected with outer protective packaging material.

WARNING

The MBM cabinet is heavy (see Table 3-1 on page 3-2). If unpacking and unloading instructions are not closely followed, the cabinet may tip and cause serious injury.

1. Carefully inspect the outer packaging for evidence of damage during transit.

CAUTION

Do not install a damaged cabinet. Report any damage to the carrier and contact an Eaton service representative immediately.

NOTE *For the following step, verify that the forklift or pallet jack is rated to handle the weight of the cabinet (see Table 3-1 on page 3-2 for cabinet weight).*

2. Use a forklift or pallet jack to move the packaged cabinet to the installation site, or as close as possible, before unpacking. If possible, move the cabinet using the pallet. Insert the forklift or pallet jack forks from the left or right side of the pallet (facing the cabinet), between the supports on the bottom of the pallet.

CAUTION

Do not tilt the MBM cabinet more than 10° from vertical or the cabinet may tip over.

3. Set the pallet on a firm, level surface, allowing a minimum clearance of 3m (10 ft) on each side for removing the cabinet from the pallet.

NOTE *The MBM cabinet is shipped with a debris shield covering the ventilation grill on top of the unit. Do not remove the debris shield until installation is complete.*

4. Remove the protective covering from the cabinet.
5. Remove the packing material, and discard or recycle in a responsible manner.
6. Inspect the contents for any evidence of physical damage, and compare each item with the Bill of Lading. If damage has occurred or shortages are evident, contact an Eaton service representative immediately to determine the extent of the damage and its impact on further installation.

NOTE *While waiting for installation, protect the unpacked cabinet from moisture, dust, and other harmful contaminants. Failure to store and protect the MBM properly may void your warranty.*

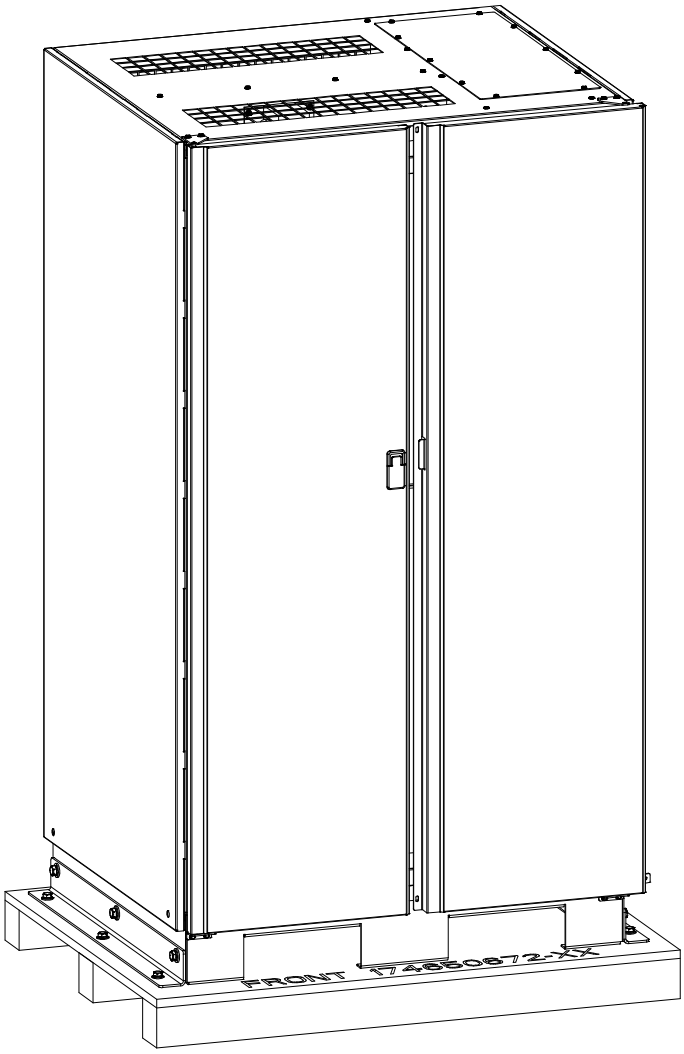

Figure 3-5. Eaton 9395 MBM Cabinet as Shipped on Pallet

Chapter 4 MBM Installation

4.1 Preliminary Installation Information

WARNING

Installation should be performed only by qualified personnel.

Refer to the following while installing the Maintenance Bypass Module (MBM):

- Chapter 3 for cabinet dimensions, equipment weight, wiring and terminal data, and installation notes.
- Do not tilt the cabinet more than ±10° during installation.
- Remove the conduit landing plates to add conduit landing holes as required. Plate material is 16 gauge steel (1.5 mm/0.06" thick).

4.2 Unloading the MBM Cabinet from the Pallet

The MBM cabinet is bolted to a wooden pallet supported by wood skids. To remove the pallet and mechanically install the MBM:

WARNING

The MBM cabinet is heavy (see Table 3-1 on page 3-2). If unpacking and unloading instructions are not closely followed, the cabinet may tip and cause serious injury.

CAUTION

- Do not tilt cabinets more than 10° from vertical.
- Lift the cabinet only with a forklift or damage may occur.

NOTE *For the following steps, verify that the forklift or pallet jack is rated to handle the weight of the cabinet (see Table 3-1 on page 3-2 for cabinet weight).*

1. If not already accomplished, use a forklift or pallet jack to move the cabinet to the installation area, or as close as possible, before unloading from the pallet. If possible, move the cabinet using the pallet. Insert the forklift or pallet jack forks between the supports on the bottom of the pallet.
2. Remove the three bolts securing the left side shipping bracket to the cabinet and three bolts securing the bracket to the pallet (see Figure 4-1). Remove the left side shipping bracket. If installing the cabinet permanently, retain the shipping bracket and securing hardware for later use.
3. Remove the three bolts securing the right side shipping bracket to the cabinet and three bolts securing the bracket to the pallet (see Figure 4-2). Remove the right side shipping bracket. If installing the cabinet permanently, retain the shipping bracket and securing hardware for later use.
4. Using a forklift, raise the MBM cabinet until the cabinet bottom clears the pallet by approximately 3 mm (1/8").

5. Pull the pallet from under the MBM cabinet. Discard or recycle the pallet and unused shipping brackets in a responsible manner.
6. Carefully lower the MBM cabinet until the cabinet base contacts the floor.
7. Proceed to paragraph 4.3.

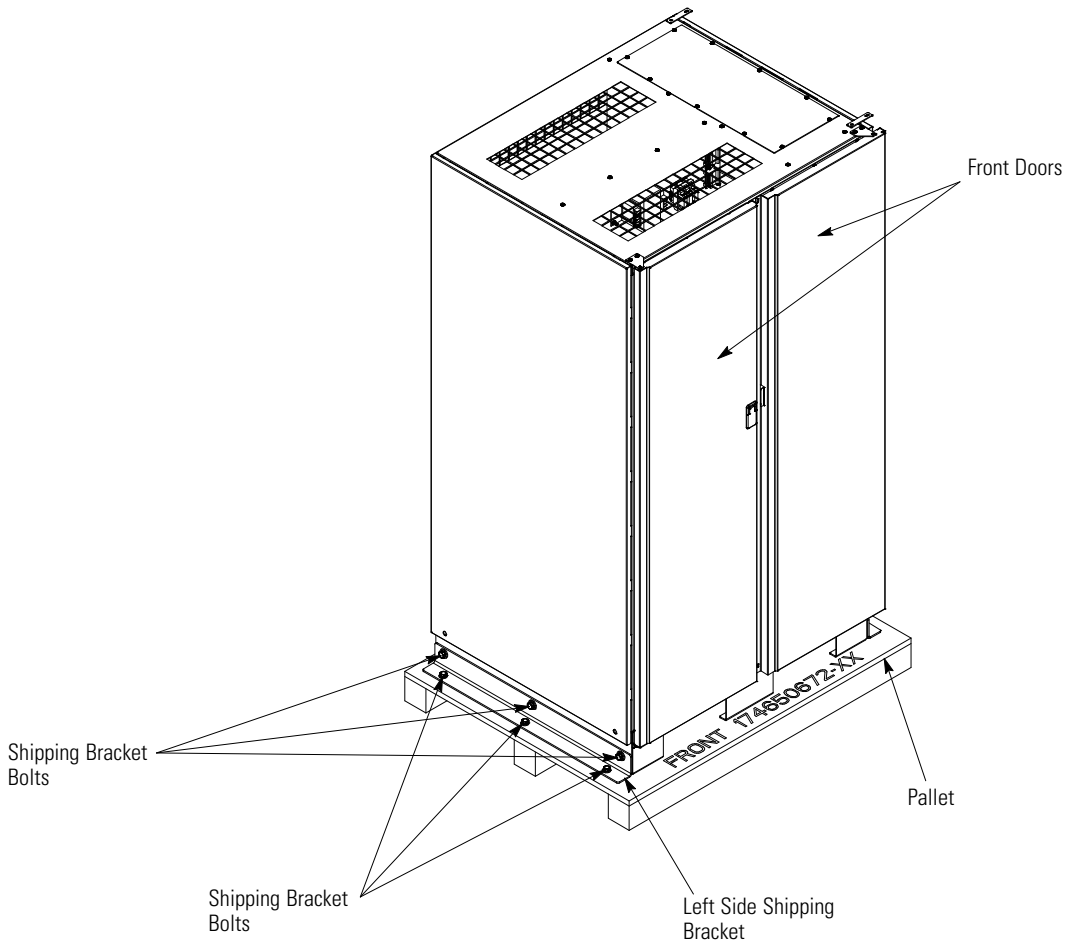

Figure 4-1. Removing the Left Side Shipping Bracket

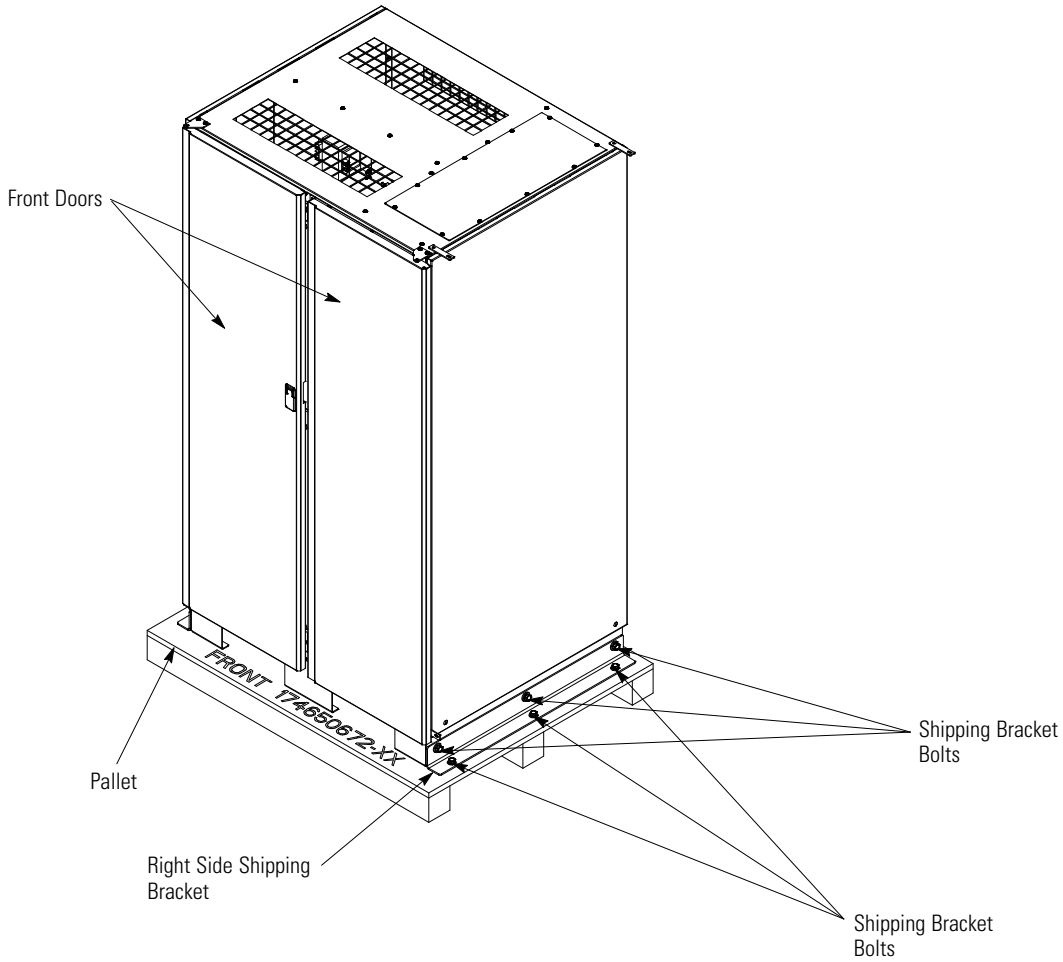

Figure 4-2. Removing the Right Side Shipping Bracket

4.3 MBM Installation

The method used to install the MBM depends on the type of installation. The MBM can be installed as a *line-up-and-match* or *standalone* system. The term *line-up-and-match* refers to cabinets that are physically attached to the UPS, and the wiring between them is internal. The term *standalone* refers to cabinets that are not physically attached to the UPS, and are wired with external customer-supplied conduit and wiring.

- To install a *line-up-and-match* MBM, proceed to paragraph 4.3.1.
- To install a *standalone* MBM, proceed to paragraph 4.3.4.

NOTE *If a Field Installed UPM (FI-UPM) is installed or will be installed in the future, the MBM must be installed in a standalone configuration.*

4.3.1 Line-up-and-Match Cabinet Installation

Use this procedure to install the MBM adjacent to the Eaton 9395 UPS cabinet (see Figure 4-3 or Figure 4-4). The MBM must be located to the left side of the UPS.

1. Verify that the UPS is properly installed and secured. Refer to the applicable Eaton 9395 Installation and Operation manual listed in paragraph 1.7 on page 1-4 for installation instructions.
2. Remove the wire entry plate located on the bottom left side of the UPS cabinet (see Figure 4-5 on page 4-6).
3. If installed, remove the cosmetic cover and hanger brackets from the right side of the MBM. If installing cosmetic covers on the UPS, mount the hanger brackets to the top right side of the UPS. Hang the side panel on the hanger brackets and align with the front and rear of the UPS.
4. Unfasten the MBM front door latch and swing the doors open (see Figure 4-1 on page 4-2).
5. Remove the door by removing the retaining screws located inside the door at the top and bottom hinge pivot points, then lift the door off. Save the retaining screws for reinstallation of the door.
6. Remove the screws securing the top and bottom internal safety shield panels, and remove the panels to gain access to the inside of the cabinet.
7. Locate the field kit (packed inside of the cabinet). Locate the nylon grommet in the field kit and install the grommet around the edges of the UPS bottom wiring access (see Figure 4-5 on page 4-6).
8. Using a forklift, move the MBM cabinet to the final installed location on the left side of the UPS cabinet. Verify that the MBM cabinet right side is against the UPS cabinet left side and the front panels are flush with each other.
9. Carefully lower the MBM cabinet until the cabinet base contacts the floor.

NOTE *Three flat cabinet joining brackets are provided in the field kit for securing the UPS and MBM cabinets at the top front, top rear, and front base (see Steps 10 and 11).*

10. Locate two flat brackets and screws from the field kit. Align the holes in the flat brackets over holes in the top rear and top front of the MBM and UPS cabinets. Secure the brackets with the screws from the field kit (see Figure 4-7 on page 4-7).
11. Locate one flat bracket and screws from the field kit. Align the holes in the flat bracket over holes in the front base of the MBM and UPS cabinets. Secure the bracket with the screws from the field kit (see Figure 4-7 on page 4-7).
12. If permanently mounting the system, proceed to Step 13; otherwise, continue to Step 15.
13. Using the retained hardware, reinstall the left shipping bracket removed in paragraph 4.2, Step 2 to the left side of the MBM cabinet with the angle facing outward (see Figure 4-1 on page 4-2).
14. Secure the cabinet to the floor with customer-supplied hardware.
15. Proceed to paragraph 4.3.2.

Figure 4-3. Line-up-and-Match MBM with a Eaton 9395 225–275 kVA UPS

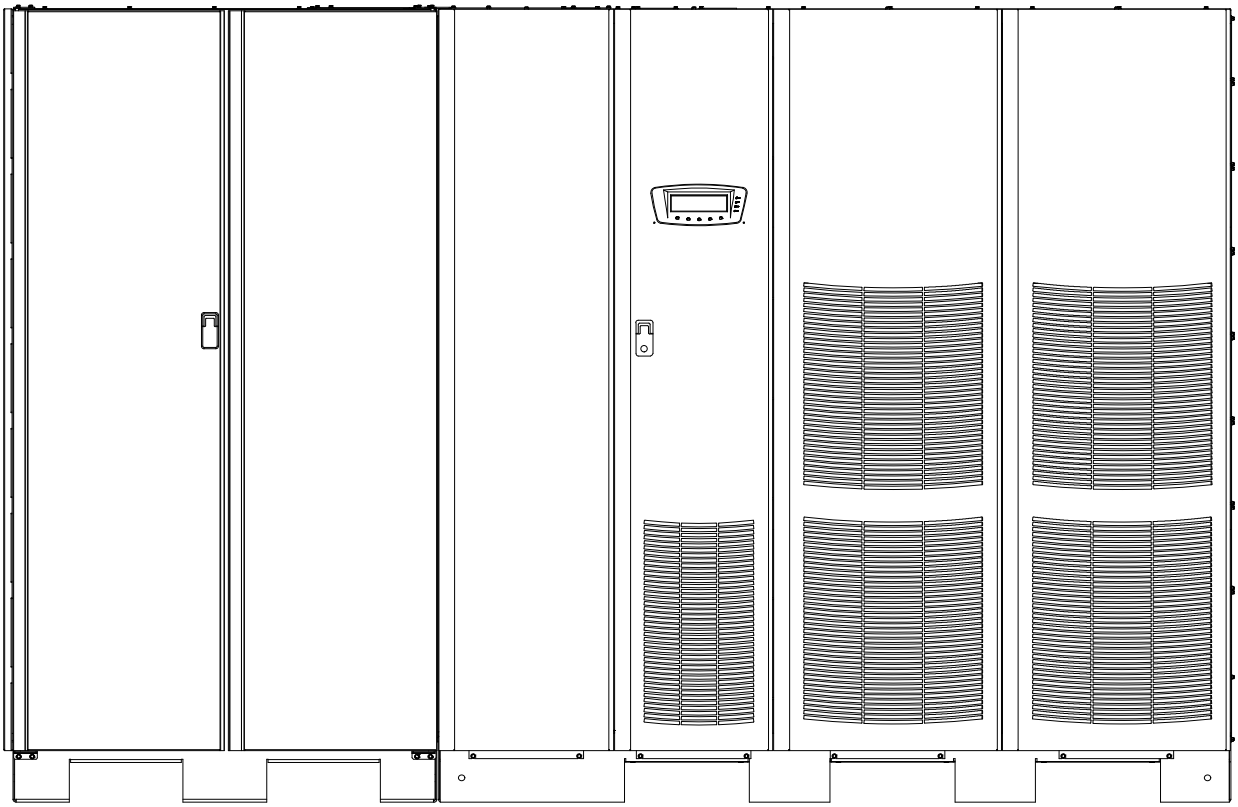

Figure 4-4. Line-up-and-Match MBM with a Eaton 9395 450–550 kVA UPS

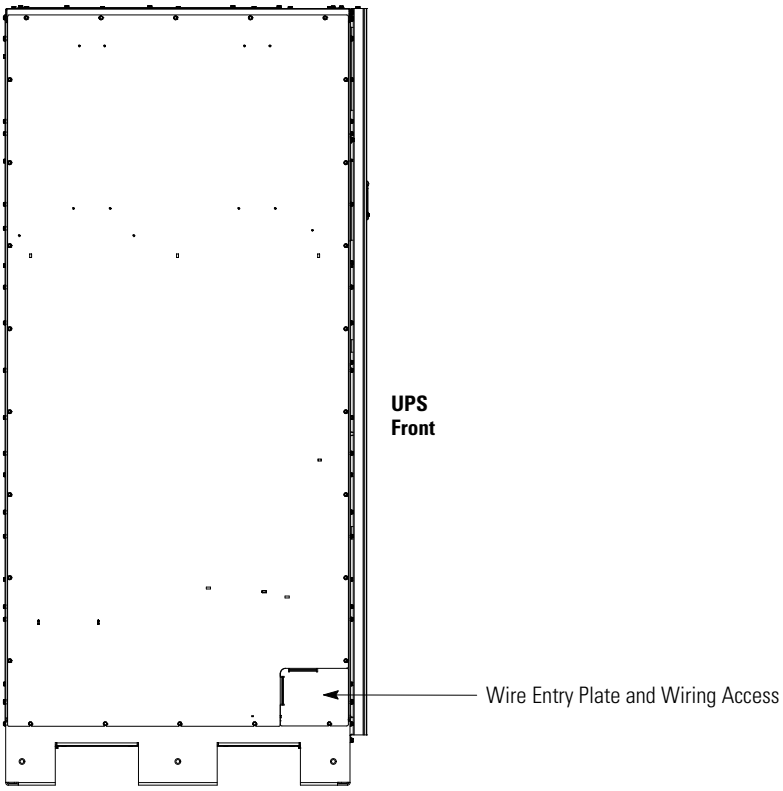

Figure 4-5. UPS Left Side View

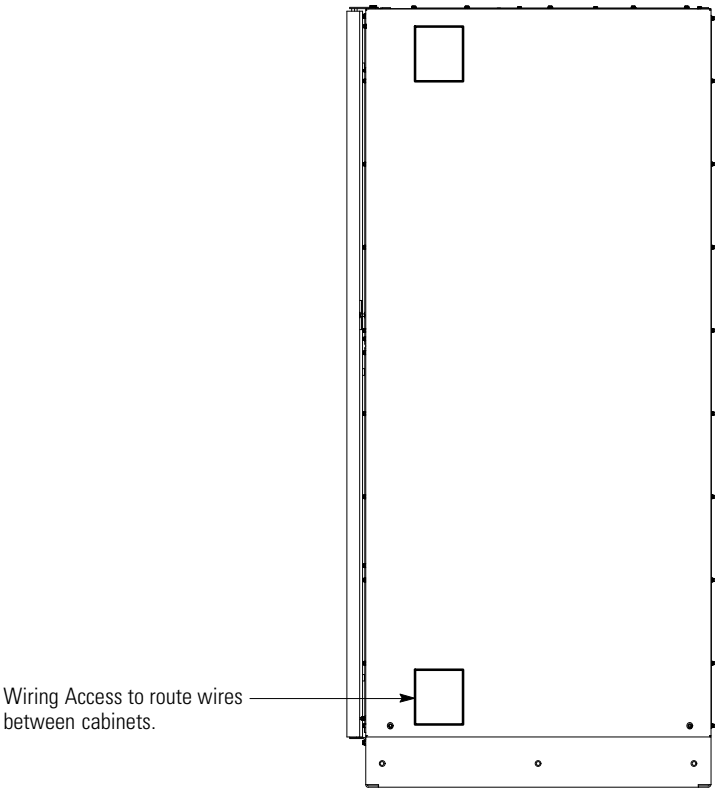

Figure 4-6. MBM Cabinet Right Side View

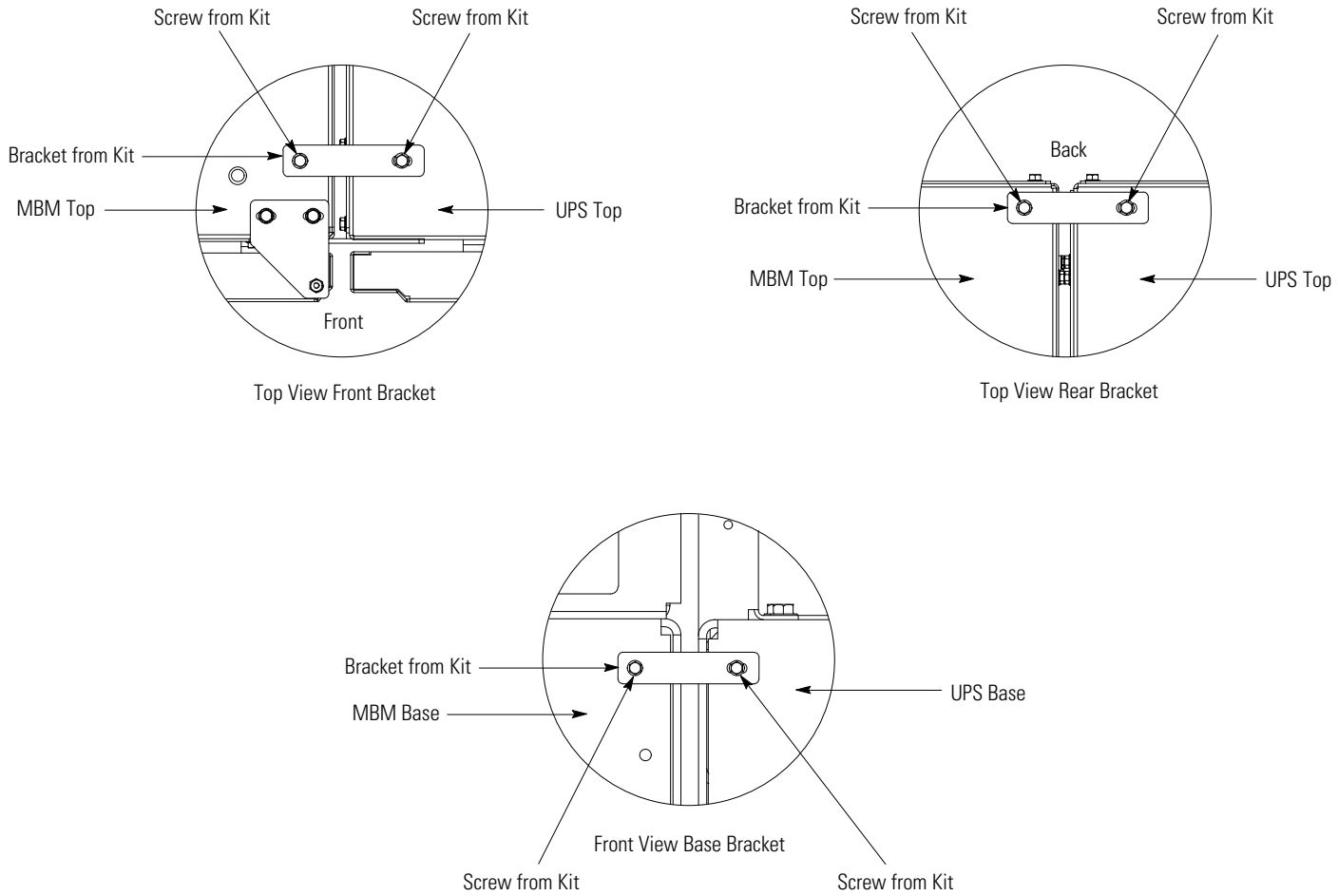

Figure 4-7. MBM to Eaton 9395 UPS Joining Brackets

4.3.2 Line-up-and-Match Power Wiring Installation

NOTE *The MBM cabinet is shipped with a debris shield covering the ventilation grill on top of the unit. Do not remove the debris shield until installation is complete. However, remove the shield before using the MBM. Once the debris shield is removed, do not place objects on the ventilation grill.*

NOTE *Power wiring to the MBM maintenance bypass input and the output to the critical load must be run in customer-supplied conduit.*

NOTE *Remove the MBM cabinet top or bottom conduit landing plate to drill or punch conduit holes (see Figure 4-8 on page 4-10).*

NOTE *Refer to the applicable Eaton 9395 Installation and Operation manual listed in paragraph 1.7 on page 1-4 for UPS cabinet wiring information, and conduit and terminal locations.*

To install wiring:

1. Verify the UPS system is turned off and all power sources are removed. Refer to the applicable Eaton 9395 Installation and Operation manual listed in paragraph 1.7 on page 1-4 for shutdown instructions.

2. If not already open, unfasten the front door latch and swing the doors open (see Figure 4-1 on page 4-2).

3. If not already removed, remove the doors. Remove the retaining screws located inside each door at the top and bottom hinge pivot points, then lift the door off. Retain the hardware for later use.

4. If not already removed, remove the screws securing the top and bottom internal safety shield panels and remove the panels to gain access to the MBM terminals. Retain the hardware for later use.

5. Route the input and output cables through either the top or bottom of the cabinet to the MBM terminals. See Figure 4-8 through Figure 4-12 for wiring access information and terminal locations.

   Top Access Wiring. Remove the top conduit plate from the top of the MBM. Identify all conduit requirements and mark their location. Drill and punch all conduit holes in the top conduit plate prior to mounting on the MBM. Install the conduit plate and install all conduit runs into the plate. Pull the wiring through the conduit into the wiring area.

   Bottom Access Wiring. Remove the bottom conduit plate from the inside bottom of the MBM. Identify all conduit requirements and mark their location. Drill and punch all conduit holes in the bottom conduit plate prior to mounting on the MBM. Install the conduit plate and install all conduit runs into the plate. Pull the wiring through conduit into the wiring area.

6. An MBM-to-UPS output wiring harness is supplied inside the MBM. Route this harness through the wiring access in the side of the cabinets (see Figure 4-5 and Figure 4-6) to the UPS output terminals. Refer to the applicable Eaton 9395 Installation and Operation manual listed in paragraph 1.7 on page 1-4 for UPS cabinet terminal locations and termination requirements. See Figure 4-8 through Figure 4-12 for wiring access information and terminal locations.

7. Connect phase A, B, and C power wiring to the UPS output terminals. Connect the Neutral (if required) to the UPS and MBM neutral terminals. See paragraph 3.2.2 on page 3-5 for wiring and termination requirements.

NOTE *When installing an MBM, a minimum of two separate feeds with upstream feeder breakers, or a single feed with two upstream feeder breakers, must be provided: one for the UPS or rectifier input breaker (RIB) (if installed) and one for the maintenance bypass input. DO NOT use a single feed or a single feeder breaker to supply both the UPS or RIB and the maintenance bypass. If a bypass input breaker (BIB) is installed in the MBM and a single-feed UPS is being installed, a single feed to the maintenance bypass is acceptable for supplying both the UPS and the bypass.*

8. Route the maintenance bypass input and neutral (if required) cables from the utility source to the MBM bypass input and neutral terminals. See Figure 4-8 through Figure 4-12 for wiring access information and terminal locations.

9. Connect phase A, B, and C power wiring to the MBM maintenance bypass input and utility source terminals. Connect the Neutral (if required) to the utility source and MBM neutral terminals. See paragraph 3.2.2 on page 3-5 for wiring and termination requirements.

10. Route the output and neutral (if required) cables from the MBM output terminals to the critical load. See Figure 4-8 through Figure 4-12 for wiring access information and terminal locations.

11. Connect phase A, B, and C power wiring to the MBM output terminals and the critical load. Connect the Neutral (if required) to the critical load and MBM neutral terminals. See paragraph 3.2.2 on page 3-5 for wiring and termination requirements.

12. If wiring an MBM with a bypass input breaker (BIB), or BIB and rectifier input breaker (RIB), proceed to Step 13; otherwise, proceed to Step 18.

13. An MBM-to-UPS bypass input wiring harness is supplied inside the MBM. Route the harness through the wiring access in the side of the cabinets (see Figure 4-5 and Figure 4-6) to the UPS bypass input terminals. Refer to the applicable Eaton 9395 Installation and Operation manual listed in paragraph 1.7 on page 1-4 for UPS cabinet terminal locations and termination requirements. See Figure 4-8 through Figure 4-12 for wiring access information and terminal locations.

14. Connect phase A, B, and C power wiring to the UPS bypass input terminals. Connect the Neutral (if required) to the UPS and MBM neutral terminals. See paragraph 3.2.2 on page 3-5 for wiring and termination requirements.

15. If wiring an MBM with a RIB, proceed to Step 16; otherwise, proceed to Step 18.

16. An MBM-to-UPS rectifier input wiring harness is supplied inside the MBM. Route the harness through the wiring access in the side of the cabinets (see Figure 4-5 and Figure 4-6) to the UPS rectifier input terminals. Refer to the applicable Eaton 9395 Installation and Operation manual listed in paragraph 1.7 on page 1-4 for UPS cabinet terminal locations and termination requirements. See Figure 4-8 through Figure 4-12 for wiring access information and terminal locations.

17. Connect phase A, B, and C power wiring to the UPS rectifier input terminals. Connect the Neutral (if required) to the UPS and MBM neutral terminals. See paragraph 3.2.2 on page 3-5 for wiring and termination requirements.

18. After wiring the MBM to the utility power, UPS, and critical load, ground the system according to local and/or national electrical wiring codes.

19. If wiring interface connections, proceed to paragraph 4.3.3; otherwise, proceed to Step 20.

20. When all wiring is complete, reinstall the safety shield panels removed in previous steps.

21. Reinstall the doors removed in previous steps and secure with the retained hardware.

22. Close the doors and secure the latch.

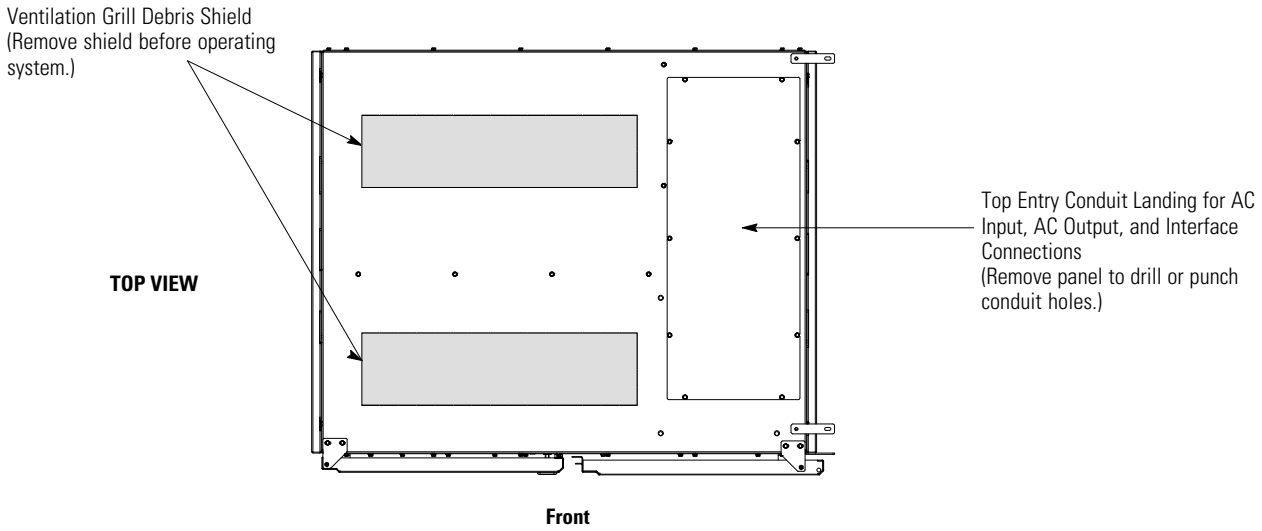

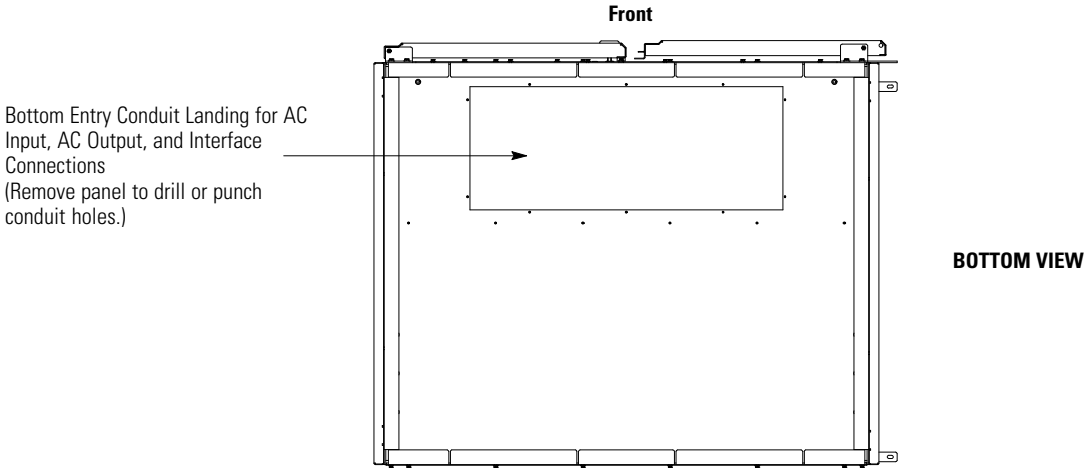

Figure 4-8. Conduit and Wire Entry Locations

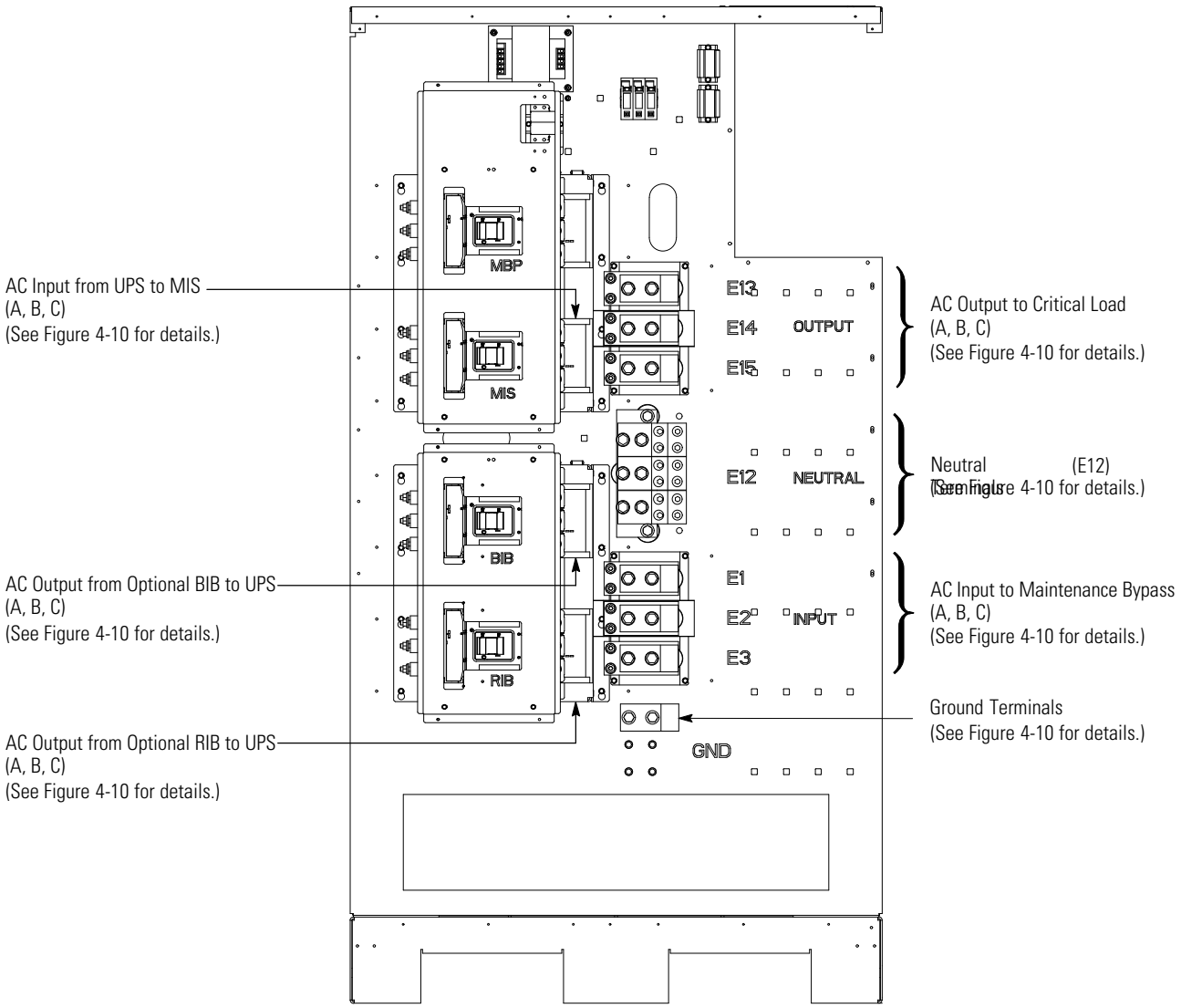

Figure 4-9. 9395 275 kVA MBM Power Terminal Locations

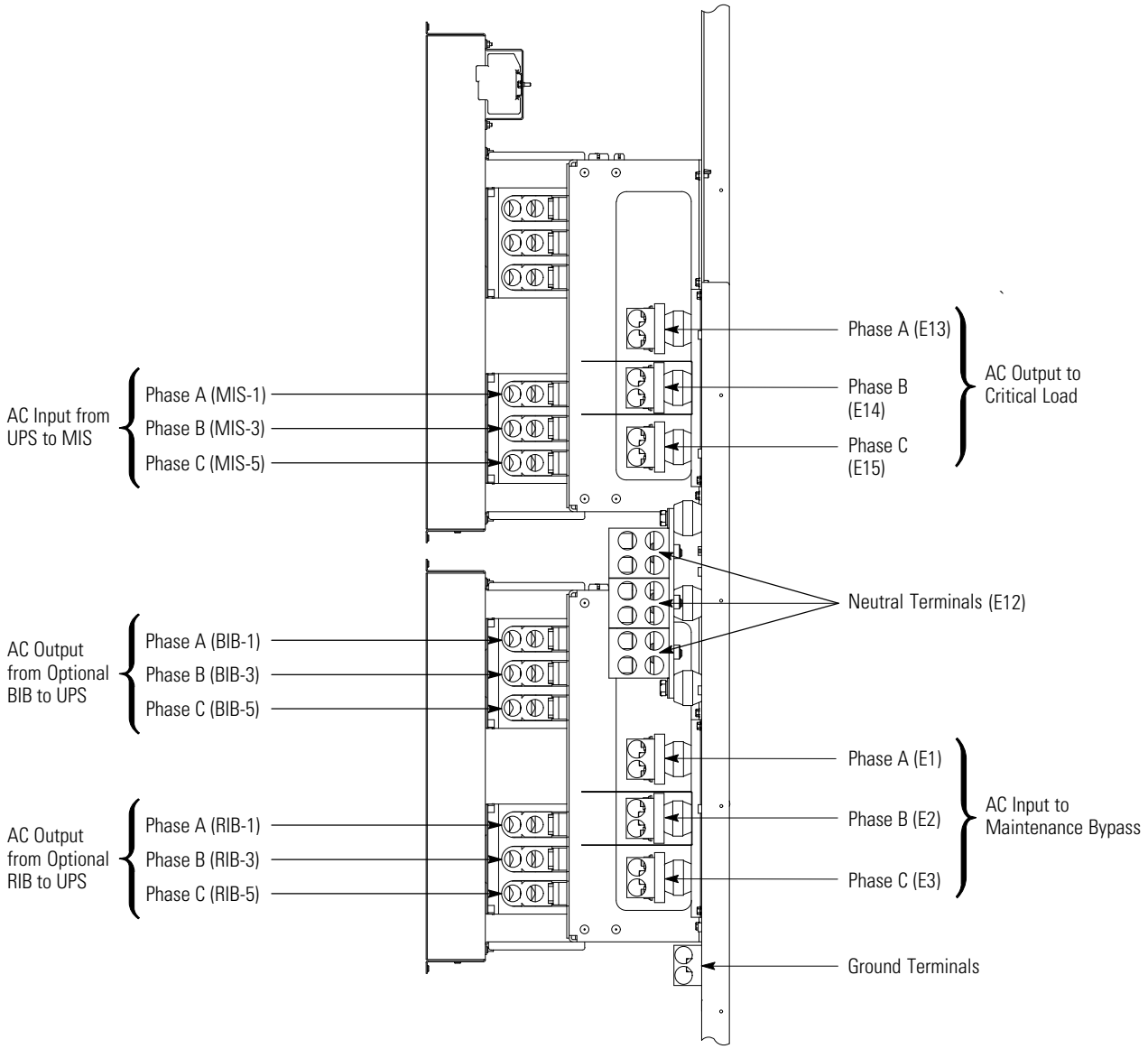

Figure 4-10. 9395 275 kVA MBM Power Terminal Detail – Right Side View

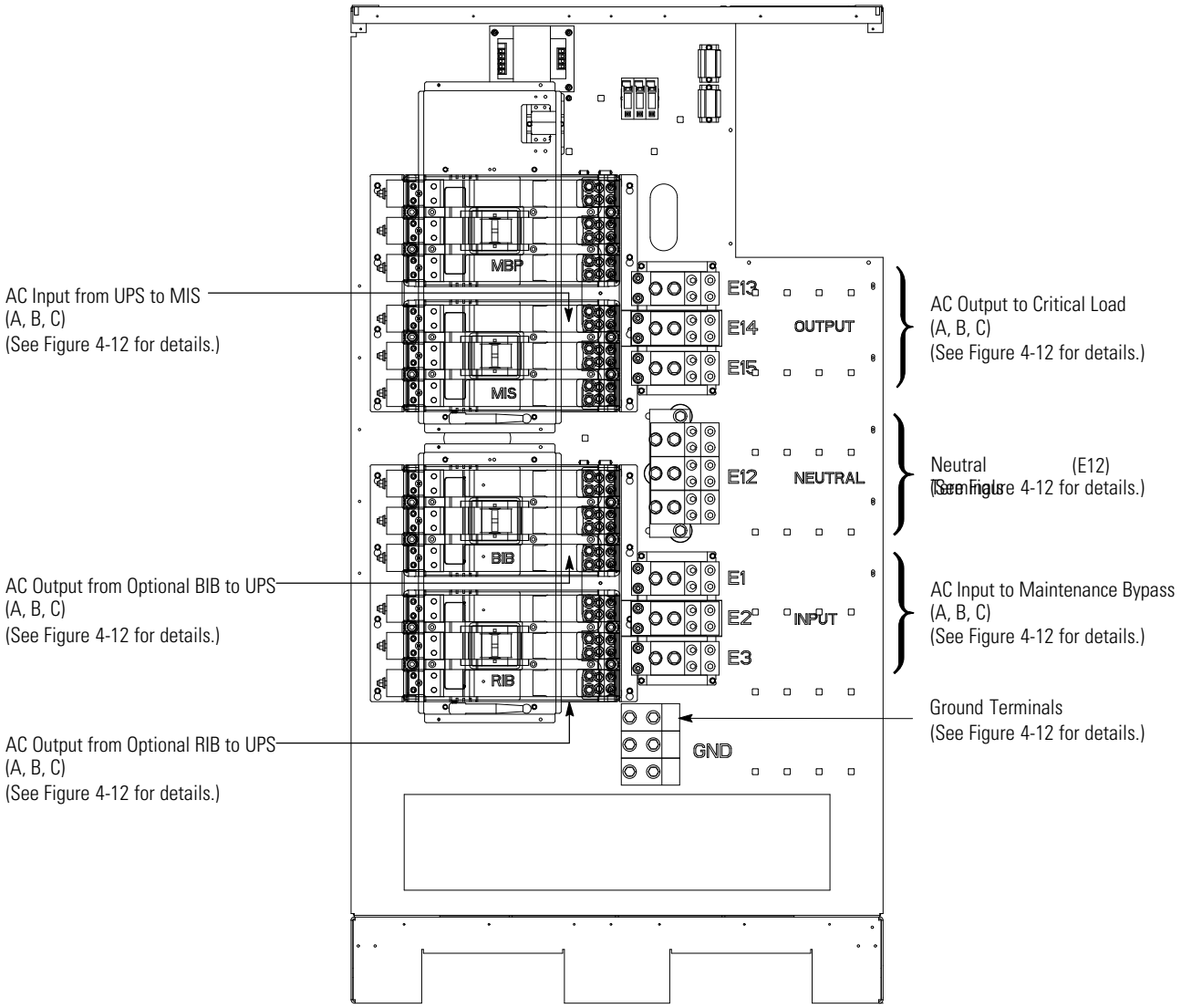

Figure 4-11. 9395 550 kVA MBM Power Terminal Locations

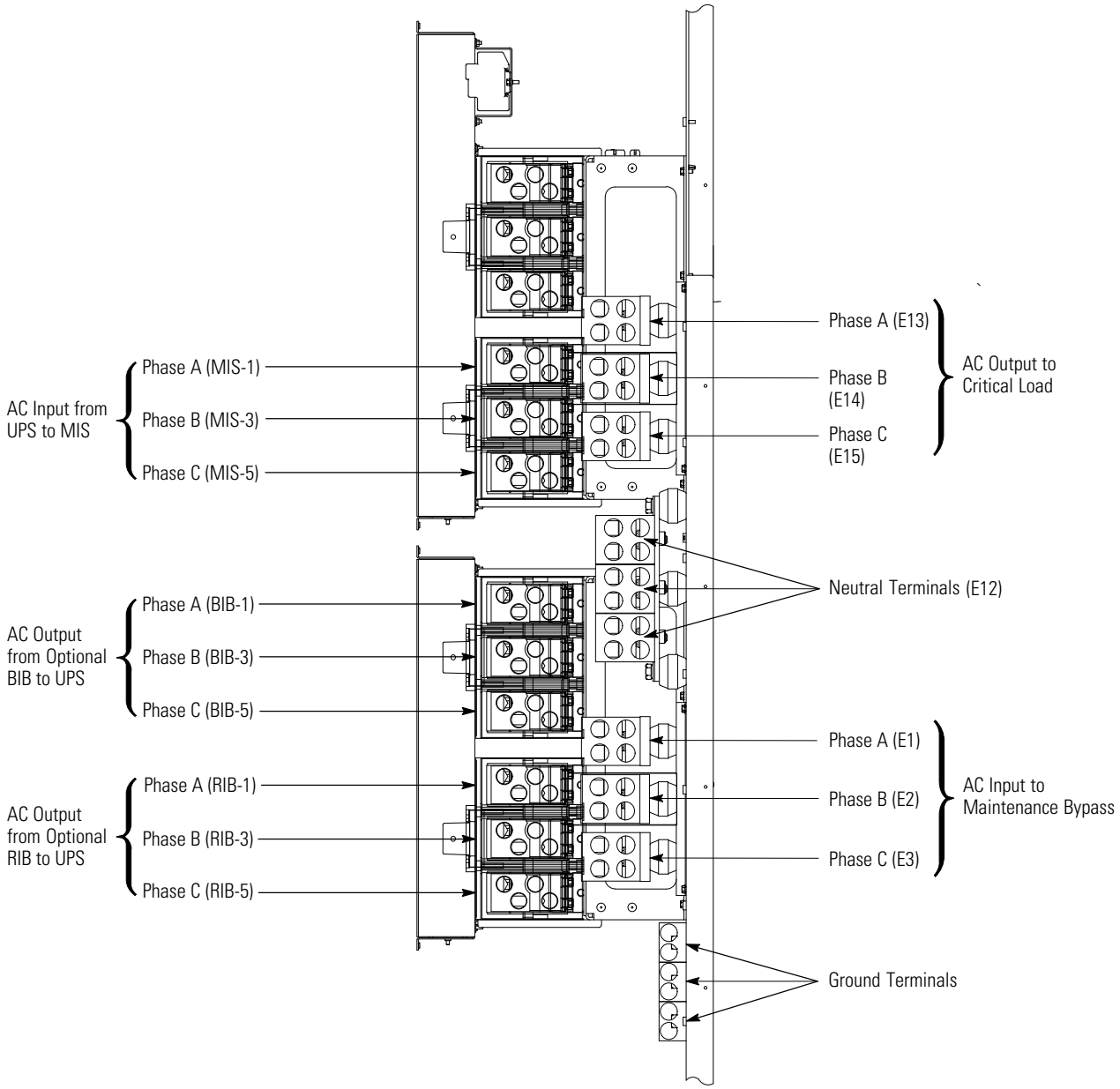

Figure 4-12. 9395 550 kVA MBM Power Terminal Detail – Right Side View

4.3.3 Line-up-and-Match TB1 Interface Wiring Installation

WARNING

Hazardous voltages are present near the user interface terminal area if the MBM is not totally disconnected.

NOTE *If wiring between the UPS and MBM interface terminals can not be routed through the line-up-and-match cabinets, conduit must be installed between the UPS and MBM cabinets for the wiring. See paragraph 4.3.6 for standalone interface wiring installation instructions. Install the interface wiring in separate conduit from the power wiring.*

1. Verify the UPS system is turned off and all power sources are removed. Refer to the applicable Eaton 9395 Installation and Operation manual listed in paragraph 1.7 on page 1-4 for shutdown instructions.
2. If not already open, unfasten the front door latch and swing the doors open (see Figure 4-1 on page 4-2).
3. If not already removed, remove the doors. Remove the retaining screws located inside each door at the top and bottom hinge pivot points, then lift the door off. Retain the hardware for later use.
4. If not already removed, remove the screws securing the top and bottom internal safety shield panels and remove the panels to gain access to the MBM terminals. Retain the hardware for later use.
5. To locate the appropriate terminals and review the wiring and termination requirements, see paragraph 3.2.3 on page 3-13, Table 4-1 on page 4-16, and Figure 4-13 through Figure 4-15. Refer to the applicable Eaton 9395 Installation and Operation manual, listed in paragraph 1.7 on page 1-4 for UPS cabinet terminal locations and termination requirements.
6. Route and connect the MBM UPS on Bypass and UPS on Maintenance Bypass interface wiring from the MBM through the wiring access in the side of the cabinets (see Figure 4-5 on page 4-6 and Figure 4-6 on page 4-6) to the UPS interface terminals.
7. When all wiring is complete, reinstall the safety shield panels removed in previous steps.
8. Reinstall the doors removed in previous steps and secure with the retained hardware.
9. Close the doors and secure the latch.

Table 4-1. TB1 and TB2 Interface Connections

Terminal TB1	Name	Description
1	MBP Aux #2 NC	
2	MBP Aux #2 Common	Output: Normally open (NO) contact used to indicate whether the MBM MBP is closed and the UPS system is on maintenance bypass.
3	MBP Aux #2 NO	
4	MIS Aux #2 NC	Output: Normally closed (NC) and normally-open (NO) contacts used to indicate whether the MBM MIS is closed.
5	MIS Aux #2 Common	
6	Mis Aux #2 NO	
7	Not Used	
8	Not Used	
9	K3 NC Aux	Output: Normally-closed contact opens when the output contactor closes. Used to indicate when the UPS is on bypass.
10	K3 Aux Common	
Terminal TB2 (Optional)	**Name**	**Description**
1	RIB Aux #2 NC	Output: Normally closed (NC) and normally-open (NO) contacts can be used to indicate whether the MBM RIB is closed.
2	RIB Aux #2 Common	
3	RIB Aux #2 NO	
4	BIB Aux #2 NC	Output: Normally closed (NC) and normally-open (NO) contacts can be used to indicate whether the MBM BIB is closed.
5	BIB Aux #2 Common	
6	BIB Aux #2 NO	
7	Not Used	
8	Not Used	
9	Not Used	
10	Not Used	

NOTE "Common" indicates connection to common side of isolated relay contact.

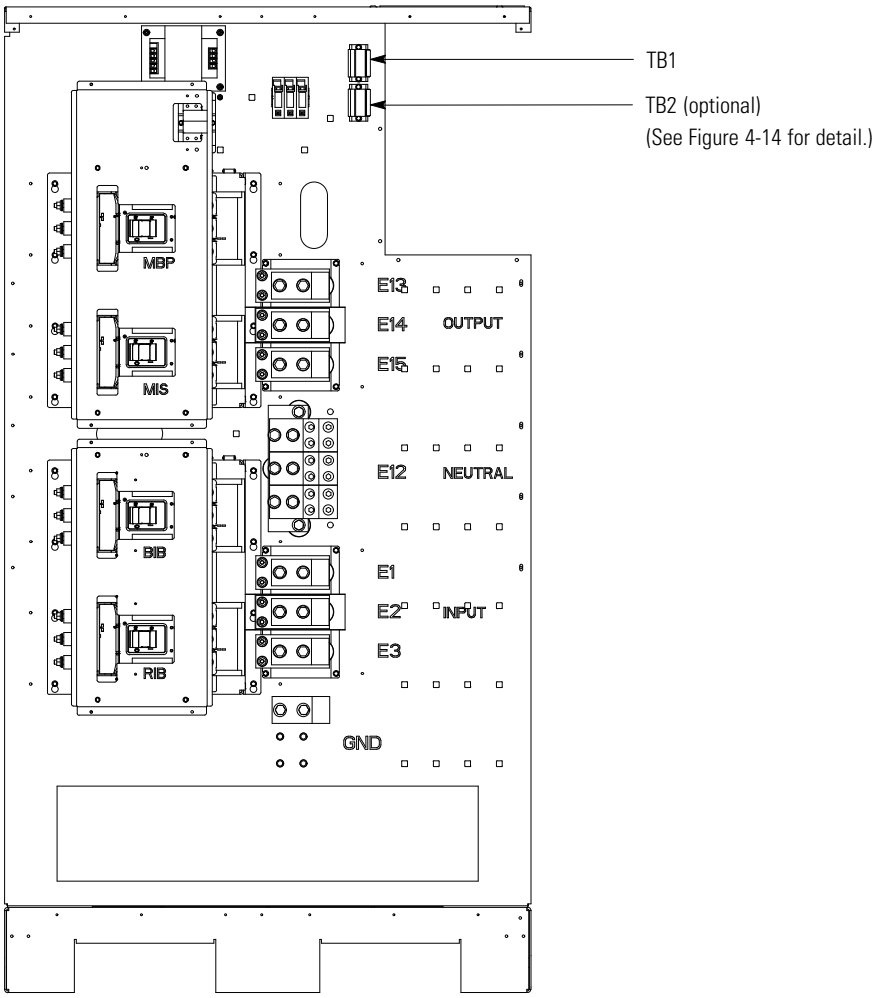

Figure 4-13. Interface Terminal Locations

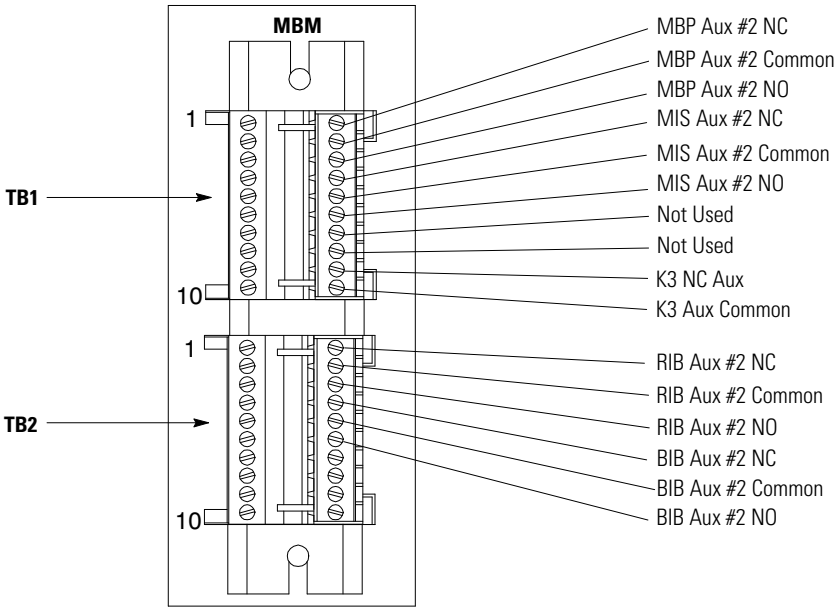

Figure 4-14. Terminal Blocks TB1 and TB2 Connector Assignments

Maintenance Bypass Monitoring Terminations		
From	**To**	**Description**
UPS TB1-9 (Output Contactor K3 NC Aux)	MBM TB1-9 (Output Contactor K3 NC Aux)	UPS on bypass
UPS TB1-10 (Output Contactor K3 Aux Common)	MBM TB1-10 (Output Contactor K3 Aux Common)	
UPS TB3-9 (Building Alarm 5)	MBM TB1-3 (MBP Aux #2 NO)	UPS on maintenance bypass (Program UPS building alarm for UPS on Maintenance Bypass.)
UPS TB3-10 (Building Alarm 5 Return)	MBM TB1-2 (MBP Aux #2 Common)	

NOTE "Return" indicates connection to electronics circuit ground. "Common" indicates connection to common side of isolated relay contact.

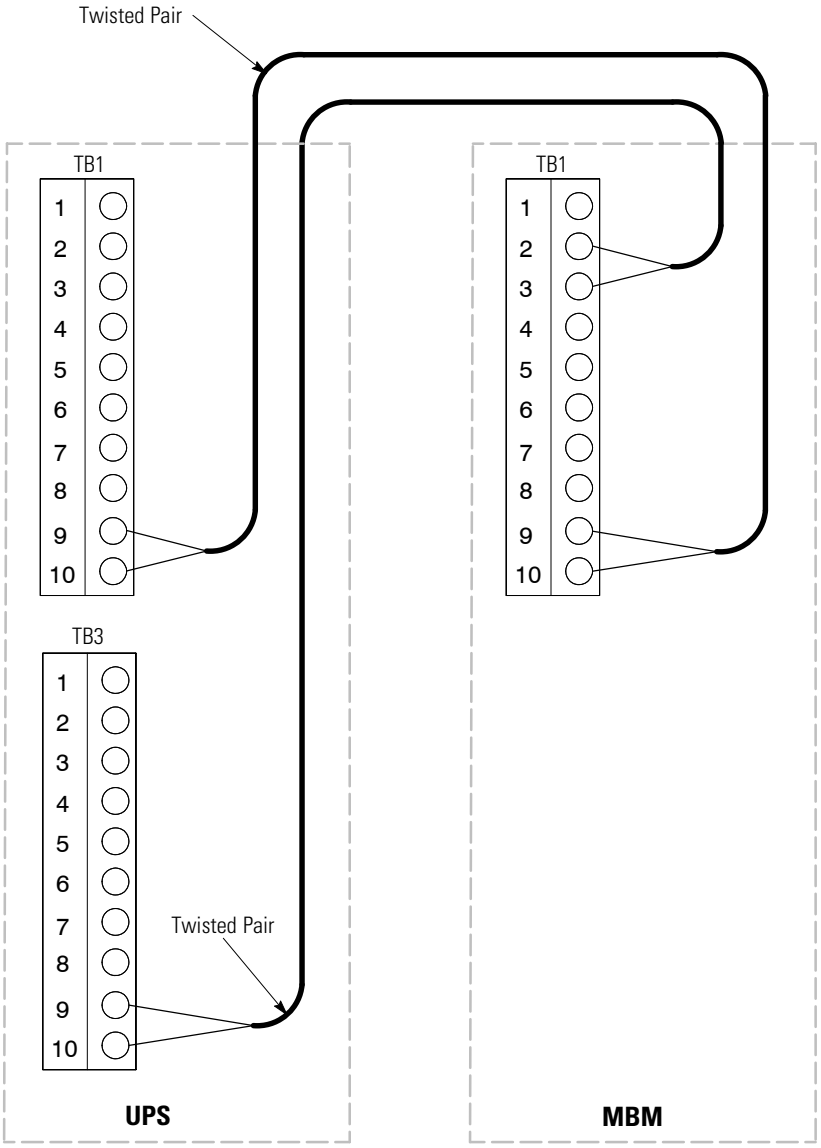

NOTE *If Building Alarm 5 is being used for another purpose, any unused building alarm on the 9395 UPS TB3 terminal board can be used for the MBM. Refer to the applicable Powerware 9395 UPS Installation and Operation Manual listed in paragraph 1.7 on page 1-4 for the 9395 UPS TB3 terminal assignments.*

Figure 4-15. MBM Interface Wiring

4.3.4 Standalone Cabinet Installation

To install an MBM located separately from the Eaton 9395 UPS cabinet (see Figure 4-16 and Figure 4-17):

1. Verify that the UPS is properly installed and secured. Refer to the applicable Eaton 9395 Installation and Operation manual listed in paragraph 1.7 on page 1-4 for installation instructions.
2. Using a forklift, move the MBM cabinet to the final installed location.
3. Carefully lower the MBM cabinet until the cabinet base contacts the floor.
4. Unfasten the MBM front door latch and swing the doors open (see Figure 4-1 on page 4-2).
5. Remove the door by removing the retaining screws located inside the door at the top and bottom hinge pivot points, then lift the door off. Save the retaining screws for reinstallation of the door.
6. Remove the screws securing the top and bottom internal safety shield panels, and remove the panels to gain access to the inside of the cabinet.
7. If permanently mounting the system, proceed to Step 8; otherwise, continue to Step 10.
8. Using the retained hardware, reinstall the shipping brackets removed in paragraph 4.2, Steps 2 and 3 to the left and right sides of the MBM cabinet with the angle facing outward (see Figure 4-1 and Figure 4-2).
9. Secure the cabinet to the floor with customer-supplied hardware.
10. Proceed to paragraph 4.3.5.

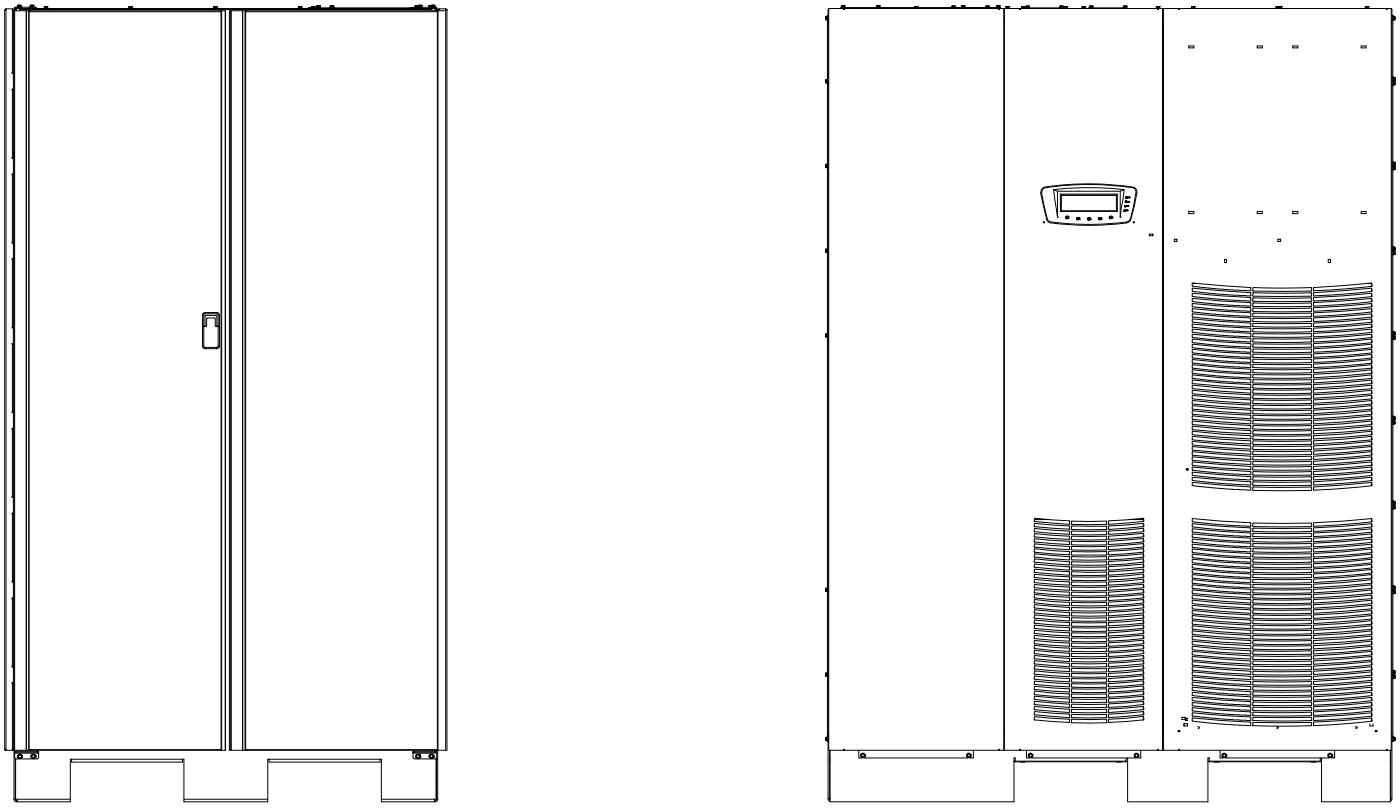

Figure 4-16. Standalone MBM with an Eaton 9395 225–275 kVA UPS

Figure 4-17. Standalone MBM with an Eaton 9395 450–550 kVA UPS

4.3.5 Standalone Power Wiring Installation

NOTE *The MBM cabinet is shipped with a debris shield covering the ventilation grill on top of the unit. Do not remove the debris shield until installation is complete. However, remove the shield before using the MBM. Once the debris shield is removed, do not place objects on the ventilation grill.*

NOTE *All power wiring to the MBM must be run in customer-supplied conduit.*

NOTE *Remove the MBM cabinet top or bottom conduit landing plate to drill or punch conduit holes (see Figure 4-8 on page 4-10).*

NOTE *Refer to the applicable Eaton 9395 Installation and Operation manual listed in paragraph 1.7 on page 1-4 for UPS cabinet wiring information, and conduit and terminal locations.*

To install wiring:

1. Verify the UPS system is turned off and all power sources are removed. Refer to the applicable Eaton 9395 Installation and Operation manual listed in paragraph 1.7 on page 1-4 for shutdown instructions.

2. If not already open, unfasten the front door latch and swing the doors open (see Figure 4-1 on page 4-2).

3. If not already removed, remove the doors. Remove the retaining screws located inside each door at the top and bottom hinge pivot points, then lift the door off. Retain the hardware for later use.

4. If not already removed, remove the screws securing the top and bottom internal safety shield panels and remove the panels to gain access to the MBM terminals. Retain the hardware for later use.

5. Route the power cables through either the top or bottom of the cabinet to the MBM terminals. See Figure 4-8 through Figure 4-12 for wiring access information and terminal locations.

   Top Access Wiring. Remove the top conduit plate from the top of the MBM. Identify all conduit requirements and mark their location. Drill and punch all conduit holes in the top conduit plate prior to mounting on the MBM. Install the conduit plate and install all conduit runs into the plate. Pull the wiring through the conduit into the wiring area.

   Bottom Access Wiring. Remove the bottom conduit plate from the inside bottom of the MBM. Identify all conduit requirements and mark their location. Drill and punch all conduit holes in the bottom conduit plate prior to mounting on the MBM. Install the conduit plate and install all conduit runs into the plate. Pull the wiring through the conduit into the wiring area.

6. Route the output and neutral (if required) cables from the UPS to the MBM maintenance isolation breaker (MIS) input and neutral terminals. Refer to the applicable Eaton 9395 Installation and Operation manual listed in paragraph 1.7 on page 1-4 for UPS cabinet terminal locations and termination requirements. See Figure 4-8 through Figure 4-12 for wiring access information and terminal locations.

7. Connect phase A, B, and C power wiring to the UPS output and MBM MIS input terminals. Connect the Neutral (if required) to the UPS and MBM neutral terminals. See paragraph 3.2.2 on page 3-5 for wiring and termination requirements.

NOTE *When installing an MBM, a minimum of two separate feeds with upstream feeder breakers, or a single feed with two upstream feeder breakers, must be provided: one for the UPS or rectifier input breaker (RIB) (if installed) and one for the maintenance bypass input. DO NOT use a single feed or a single feeder breaker to supply both the UPS or RIB and the maintenance bypass. If a bypass input breaker (BIB) is installed in the MBM and a single-feed UPS is being installed, a single feed to the maintenance bypass is acceptable for supplying both the UPS and the bypass.*

8. Route the maintenance bypass input and neutral (if required) cables from the utility source to the MBM bypass input and neutral terminals. See Figure 4-8 through Figure 4-12 for wiring access information and terminal locations.

9. Connect phase A, B, and C power wiring to the MBM maintenance bypass input and utility source terminals. Connect the Neutral (if required) to the utility source and MBM neutral terminals. See paragraph 3.2.2 on page 3-5 for wiring and termination requirements.

10. Route the output and neutral (if required) cables from the MBM output terminals to the critical load. See Figure 4-8 through Figure 4-12 for wiring access information and terminal locations.

11. Connect phase A, B, and C power wiring to the MBM output terminals and the critical load. Connect the Neutral (if required) to the critical load and MBM neutral terminals. See paragraph 3.2.2 on page 3-5 for wiring and termination requirements.

12. If wiring an MBM with a bypass input breaker (BIB), or BIB and rectifier input breaker (RIB), proceed to Step 13; otherwise, proceed to Step 18.

13. Route the UPS bypass input and neutral (if required) cables from the UPS to the MBM BIB output and neutral terminals. Refer to the applicable Eaton 9395 Installation and Operation manual listed in paragraph 1.7 on page 1-4 for UPS cabinet terminal locations and termination requirements. See Figure 4-8 through Figure 4-12 for wiring access information and terminal locations.

14. Connect phase A, B, and C power wiring to the UPS bypass input and MBM BIB output terminals. Connect the Neutral (if required) to the UPS and MBM neutral terminals. See paragraph 3.2.2 on page 3-5 for wiring and termination requirements.

15. If wiring an MBM with a RIB, proceed to Step 16; otherwise, proceed to Step 18.

16. Route the UPS rectifier input and neutral (if required) cables from the UPS to the MBM RIB output and neutral terminals. Refer to the applicable Eaton 9395 Installation and Operation manual listed in paragraph 1.7 on page 1-4 for UPS cabinet terminal locations and termination requirements. See Figure 4-8 through Figure 4-12 for wiring access information and terminal locations.

17. Connect phase A, B, and C power wiring to the UPS rectifier input and MBM RIB output terminals. Connect the Neutral (if required) to the UPS and MBM neutral terminals. See paragraph 3.2.2 on page 3-5 for wiring and termination requirements.

18. After wiring the MBM to the utility power, UPS, and critical load, ground the system according to local and/or national electrical wiring codes.

19. If wiring interface connections, proceed to paragraph 4.3.6; otherwise, proceed to Step 20.

20. When all wiring is complete, reinstall the safety shield panels removed in previous steps.

21. Reinstall the doors removed in previous steps and secure with the retained hardware.

22. Close the doors and secure the latch.

4.3.6 Standalone TB1 Interface Wiring Installation

WARNING

Hazardous voltages are present near the user interface terminal area if the MBM is not totally disconnected.

NOTE *When installing interface wiring for TB1 connections, conduit must be installed between the UPS and MBM cabinets. Install the interface wiring in separate conduit from the power wiring.*

1. Verify the UPS system is turned off and all power sources are removed. Refer to the applicable Eaton 9395 Installation and Operation manual listed in paragraph 1.7 on page 1-4 for shutdown instructions.

2. If not already open, unfasten the front door latch and swing the doors open (see Figure 4-1 on page 4-2).

3. If not already removed, remove the doors. Remove the retaining screws located inside each door at the top and bottom hinge pivot points, then lift the door off. Retain the hardware for later use.

4. If not already removed, remove the screws securing the top and bottom internal safety shield panels and remove the panels to gain access to the MBM terminals. Retain the hardware for later use.

5. To locate the appropriate terminals and review the wiring and termination requirements, see paragraph 3.2.3 on page 3-13, Table 4-1 on page 4-16, and Figure 4-13 through Figure 4-15. Refer to the applicable Eaton 9395 Installation and Operation manual listed in paragraph 1.7 on page 1-4 for UPS cabinet terminal locations and termination requirements.

6. Route and connect the MBM UPS on Bypass and UPS on Maintenance Bypass interface wiring from the MBM interface terminals to the UPS interface terminals.

7. When all wiring is complete, reinstall the safety shield panels removed in previous steps.

8. Reinstall the doors removed in previous steps and secure with the retained hardware.

9. Close the doors and secure the latch.

4.3.7 MBP, MIS, BIB, and RIB Current Settings

The MBP, MIS, BIB, and RIB are adjustable trip breakers set at the factory. These breakers are designed to control the input and output to the UPS.

Verify the settings of the installed MBP, MIS, BIB, and RIB match the values listed in Table 4-2 and Table 4-3. Use the continuous current (Ir) dial on each breaker to adjust the trip current as necessary.

Table 4-2. Recommended Maximum MBM MBP, MIS, and BIB Circuit Breaker Ratings

MBM Model	UPS Rating	Continuous Current (Ir)	Breaker Setting
Eaton 9395 275 kVA MBM	225 kVA	300A	B
	275 kVA	350A	D
	300 kVA	400A	E
Eaton 9395 550 kVA MBM	450 kVA	600A	A
	500 kVA	700A	Set dial half-way between A and B
	550 kVA	700A	Set dial half-way between A and B

Table 4-3. Recommended Maximum MBM RIB Circuit Breaker Ratings

MBM Model	UPS Rating	Continuous Current (Ir)	Breaker Setting
Eaton 9395 275 kVA MBM	225 kVA	350A	D
	275 kVA	400A	E
	300 kVA	400A	E
Eaton 9395 550 kVA MBM	450 kVA	700A	Set dial half-way between A and B
	500 kVA	700A	Set dial half-way between A and B
	550 kVA	800A	B

4.4 Initial Startup

Startup and operational checks must be performed by an authorized Eaton Customer Service Engineer, or the warranty terms specified on page NO TAG become void. This service is offered as part of the sales contract for the MBM. Contact an Eaton service representative in advance (usually a two-week notice is required) to reserve a preferred startup date.

4.5 Completing the Installation Checklist

The final step in installing the MBM is completing the following Installation Checklist. This checklist ensures that you have completely installed all hardware, cables, and other equipment. Complete all items listed on the checklist to ensure a smooth installation. Make a copy of the Installation Checklist before filling it out, and retain the original.

After the installation is complete, an Eaton Customer Service Engineer must verify the operation of the UPS system and MBM, and commission it to support the critical load. The service representative cannot perform any installation tasks other than verifying software and operating setup parameters. Service personnel may request a copy of the completed Installation Checklist to verify all applicable equipment installations have been completed.

NOTE *The Installation Checklist MUST be completed prior to starting the UPS system and MBM for the first time.*

Installation Checklist

- ❑ All packing materials and restraints have been removed from each cabinet.
- ❑ The MBM is placed in its installed location.
- ❑ A cabinet grounding/mounting kit is installed between any cabinets that are bolted together.
- ❑ All conduits and cables are properly routed to the MBM.
- ❑ All power cables are properly sized and terminated.
- ❑ Neutral conductors are installed or bonded to ground per requirements.
- ❑ A ground conductor is properly installed.
- ❑ All interface wiring is properly routed to the MBM.
- ❑ All interface wiring is properly sized and terminated.
- ❑ MBP, MIS, BIB, and RIB current settings are correct.
- ❑ Air conditioning equipment is installed and operating correctly.
- ❑ The area around the installed MBM is clean and dust-free. (It is recommended that the MBM be installed on a level floor suitable for computer or electronic equipment.)
- ❑ Adequate workspace exists around the MBM.
- ❑ Adequate lighting is provided around the MBM.
- ❑ A 120 Vac service outlet is located within 7.5 meters (25 feet) of the MBM.
- ❑ The debris shield covering the MBM cabinet ventilation grill is removed.
- ❑ Startup and operational checks are performed by an authorized Eaton Customer Service Engineer.

Notes

Section II
Operation

Chapter 5 Understanding MBM Operation

The Maintenance Bypass Module (MBM) enables power to completely bypass and isolate the UPS so that the UPS can be safely serviced or replaced without interrupting power to critical systems.

The MBM consists of a maintenance bypass breaker (MBP), a maintenance isolation breaker (MIS), an optional bypass input breaker (BIB), and an optional rectifier input breaker (RIB). The MBP transfers the load from the UPS output to the bypass input feeder and the MIS isolates the UPS from the bypass feed and the load. The BIB and RIB provide a single point of rectifier and bypass input power control to the UPS and easily removes power from the UPS for servicing.

The MBP and MIS use either electrical or mechanical (Kirk key) interlocks to prevent paralleling the UPS inverter output and the bypass source.

5.1 MBM with Electrical Interlocks

The K1, K2, and K3 relay network in conjunction with the MBP and MIS shunt trip circuits prevent the bypass source and the UPS inverter from being connected in parallel.

When the UPS inverter is off (the UPS is in Bypass mode), K1 is energized. This is accomplished by the closing of the UPS output contactor aux contacts when the output contactor opens.

The MBP shunt trip is active when K2 is energized. This occurs when the UPS inverter is online (K1 is not energized) and the MIS is closed.

The MIS breaker shunt trip is active when K3 is energized. This occurs when the UPS inverter is online (K1 is not energized) and the MBP is closed.

If the UPS is online and the MIS breaker is closed and an attempt is made to close the MBP breaker, the MBP breaker shunt trip will activate, preventing the bypass source and the UPS inverter from being connected in parallel.

If the UPS is online and the MBP breaker is closed and an attempt is made to close the MIS breaker, the MIS breaker shunt trip will activate, preventing the bypass source and the UPS inverter from being connected in parallel.

5.2 MBM with Mechanical (Kirk Key) Interlocks

The Kirk key interlock system uses key-controlled mechanical locks on the MBP and MIS breakers to prevent the bypass source and the UPS inverter from being connected in parallel.

Two A keys and one B key are used with the MBM. A and B keys are both required to close the MBP and the MIS.

Initially, one A key is in the solenoid lock, one B key is in the MBP, and the second A key is in the MIS. All the keys are locked in place.

After the UPS is transferred to Bypass mode, the red light on the front of the MBM is illuminated indicating the UPS inverter is off and Key A is removable from the solenoid lock.

Key A is removed from the the solenoid lock, inserted in the MBP key A slot, and the MBP closed. This sequence inhibits the MBP from being closed until the UPS is in Bypass mode, preventing the bypass source and the UPS inverter from being connected in parallel.

Key B is removed from the MBP, inserted into the key B slot on the MIS, and the MIS opened. When the MIS is locked using key B, key A from the MIS to be removed and inserted into the solenoid lock and locked in place. This inhibits the MIS from being closed if the UPS is placed back online, preventing the bypass source and the UPS inverter from being connected in parallel.

The UPS is in maintenance bypass and isolated from the the maintenance bypass source until the sequence is reversed.

5.3 Normal Mode Current Flow

When the maintenance bypass breaker (MBP) is open and the maintenance isolation switch (MIS) is closed, conditioned and protected power from the UPS is routed through the MIS to the critical load.

If the optional bypass input breaker (BIB) is installed, power is supplied to the UPS through the BIB, and the UPS rectifier is supplied from a separate feeder or the UPS rectifier and bypass input terminals are jumpered together and both supplied by the BIB. If the optional BIB and rectifier input breaker (RIB) are installed, the UPS rectifier is supplied power through the RIB and the UPS bypass is supplied power through the BIB, for a dual-feed system.

Figure 5-1 shows the path of electrical power through the MBM when operating in UPS mode.

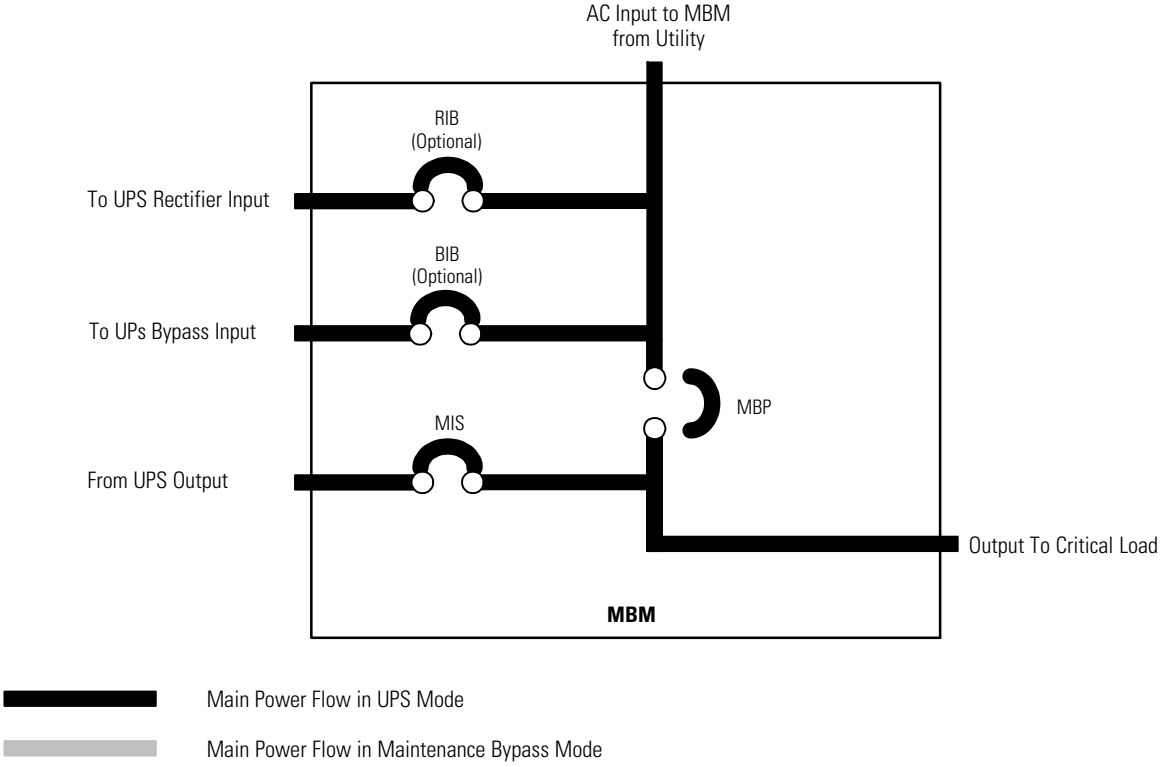

Figure 5-1. Path of Current Through the MBM in UPS Mode

5.4 Maintenance Bypass Mode Current Flow

An MBP is used to safely supply utility power to the critical load during periods of UPS maintenance or repairs. The bypass source supplies the commercial AC power to the load directly.

When the MBP is closed, the load is wrapped around the UPS while power is still supplied to the load by the UPS through the MIS. The MIS is then opened, isolating the UPS from the bypass power source. The UPS can be safely shut down and power removed from the UPS without interrupting power to the critical load. If the optional BIB and RIB are installed, the BIB and RIB are opened to remove power from the UPS. Otherwise, external upstream breakers are used to remove power. The UPS now can be serviced or replaced safely.

The critical load is not protected while the UPS is in Maintenance Bypass mode.

Figure 5-2 shows the path of electrical power through the MBM when operating in Maintenance Bypass mode.

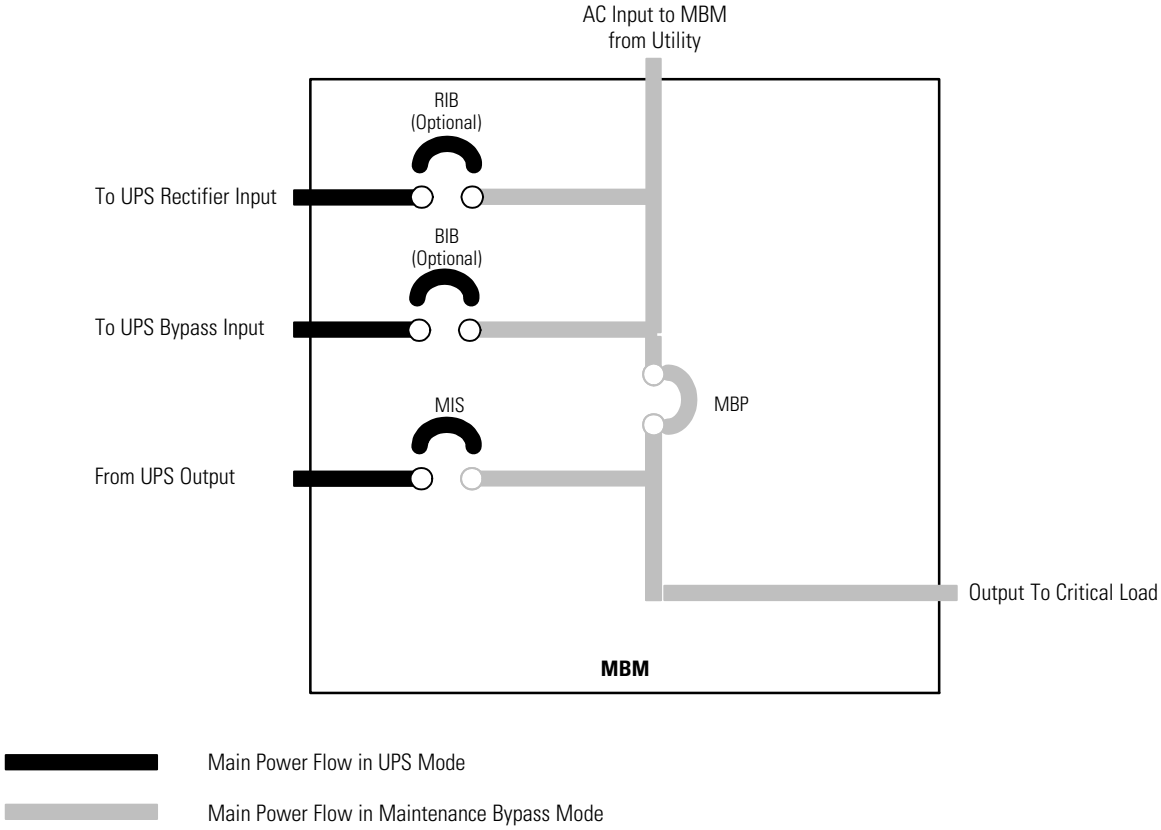

Figure 5-2. Path of Current Through the MBM in Maintenance Bypass Mode

5.5 MBM Oneline Configurations

The MBM oneline drawings in this section show the simplified internal structure of the maintenance bypass.

Oneline Drawing	MBM Model	Voltage		System Type
		Input	Output	
Figure 5-3 on page 5-5	9395 275 kVA MBM 9395 550 kVA MBM	480	480	MBM without BIB or RIB
Figure 5-4 on page 5-6	9395 275 kVA MBM 9395 550 kVA MBM	480	480	MBM with optional BIB – Dual-Feed UPS
Figure 5-5 on page 5-7	9395 275 kVA MBM 9395 550 kVA MBM	480	480	MBM with optional BIB – Single-Feed UPS
Figure 5-6 on page 5-8	9395 275 kVA MBM 9395 550 kVA MBM	480	480	MBM with optional BIB and RIB

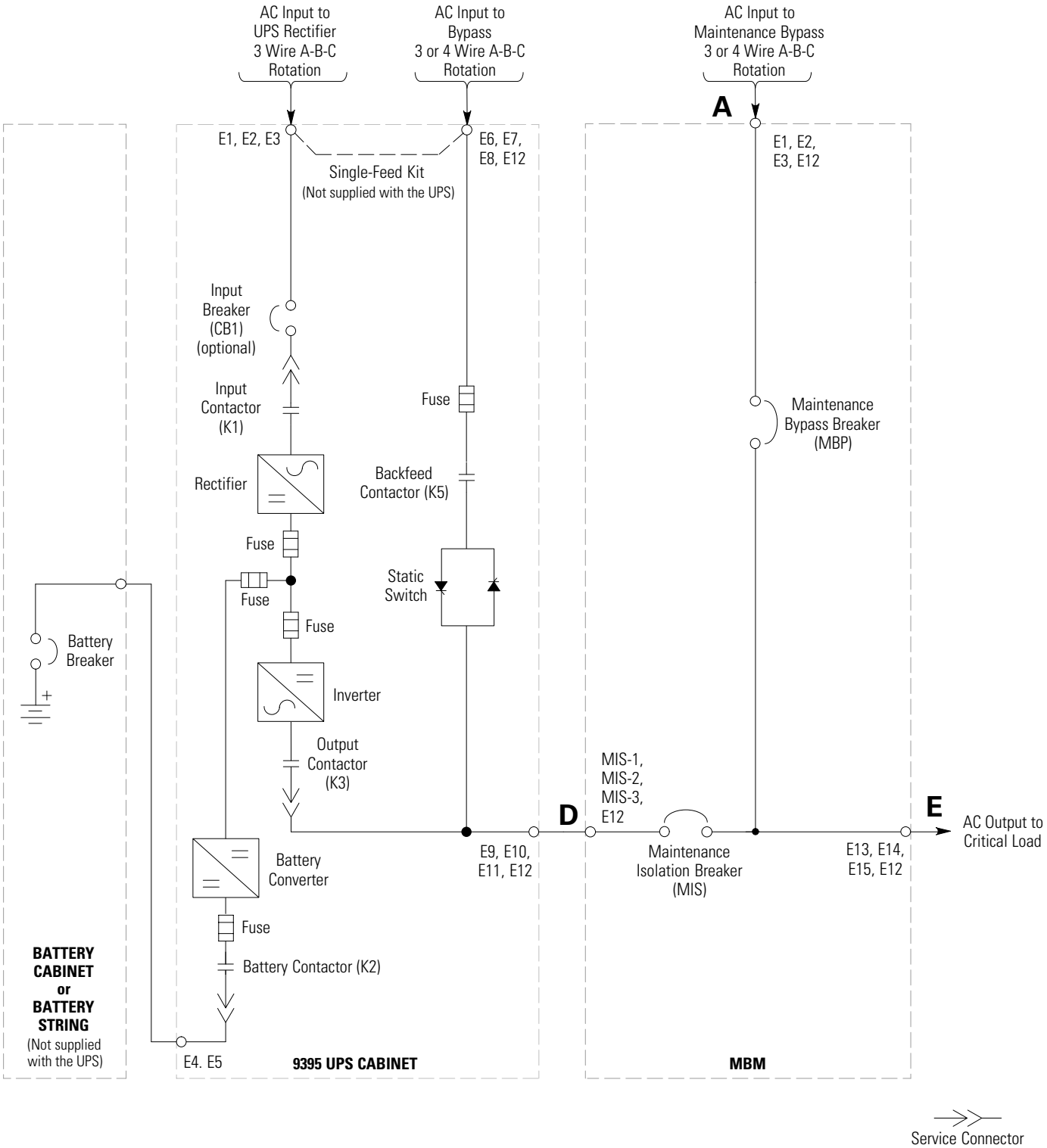

NOTE *Callout letters **A**, **D**,and **E** map to Table 3-4 on page 3-6, Table 3-5 on page 3-7, Table 3-6 on page 3-8, and Table 3-7 on page 3-9.*

NOTE *The UPS is shown in a simplified view and does not show multiple UPMs.*

NOTE *When installing an MBM, a minimum of two separate feeds with upstream feeder breakers, or a single feed with two upstream feeder breakers, must be provided: one for the UPS and one for the maintenance bypass input. DO NOT use a single feed or a single feeder breaker to supply both the UPS and the maintenance bypass.*

NOTE *If the load requires a neutral, a bypass source neutral must be provided.*

Figure 5-3. Eaton 9395 MBM without BIB or RIB

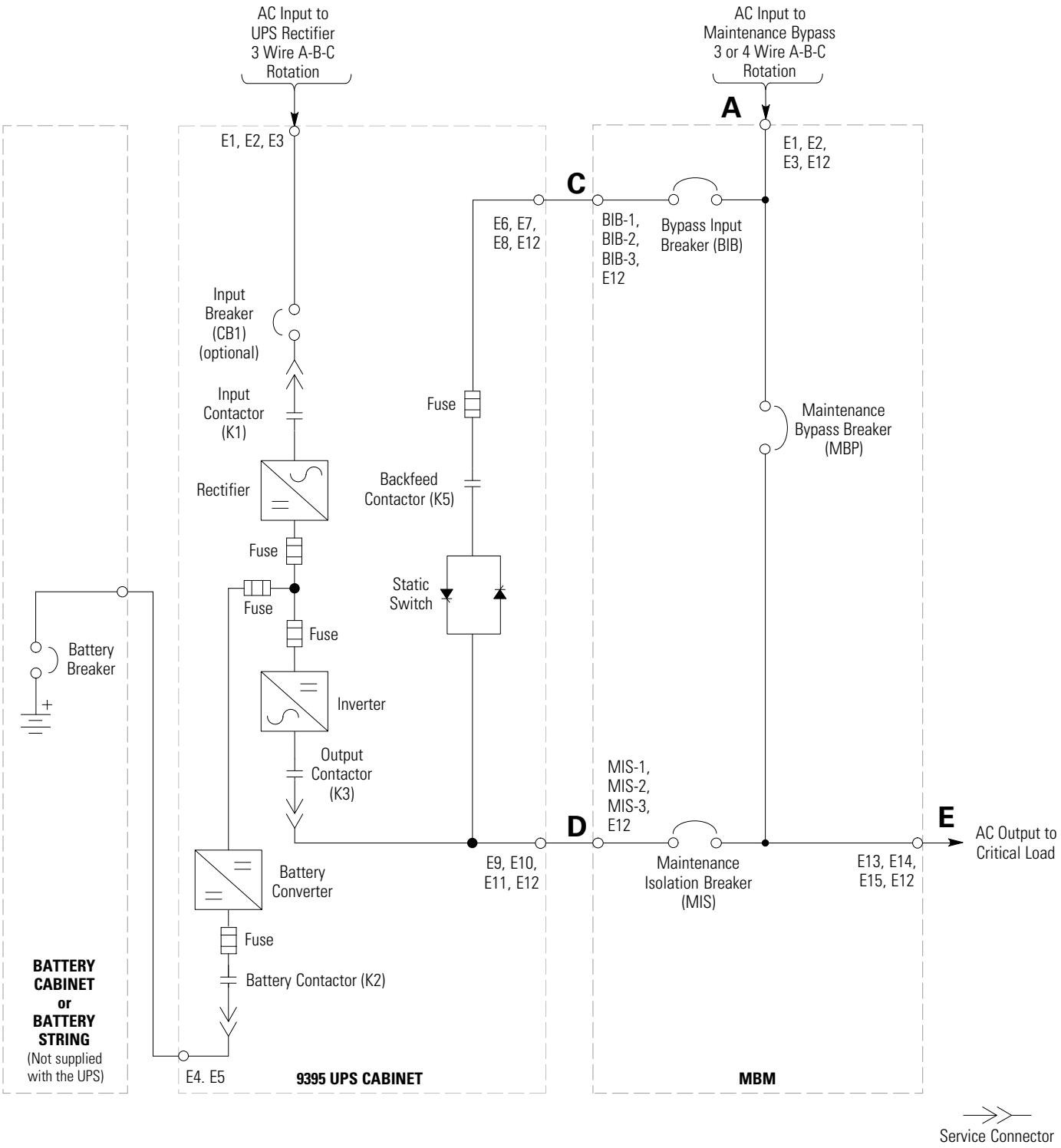

NOTE *Callout letters **A**, **C**, **D**, and **E** map to Table 3-4 on page 3-6, Table 3-5 on page 3-7, Table 3-6 on page 3-8, and Table 3-7 on page 3-9.*

NOTE *The UPS is shown in a simplified view and does not show multiple UPMs.*

NOTE *When installing an MBM, a minimum of two separate feeds with upstream feeder breakers, or a single feed with two upstream feeder breakers, must be provided: one for the UPS and one for the maintenance bypass input. DO NOT use a single feed or a single feeder breaker to supply both the UPS and the maintenance bypass.*

NOTE *If the load requires a neutral, a bypass source neutral must be provided.*

Figure 5-4. Eaton 9395 MBM with BIB – Dual-Feed UPS

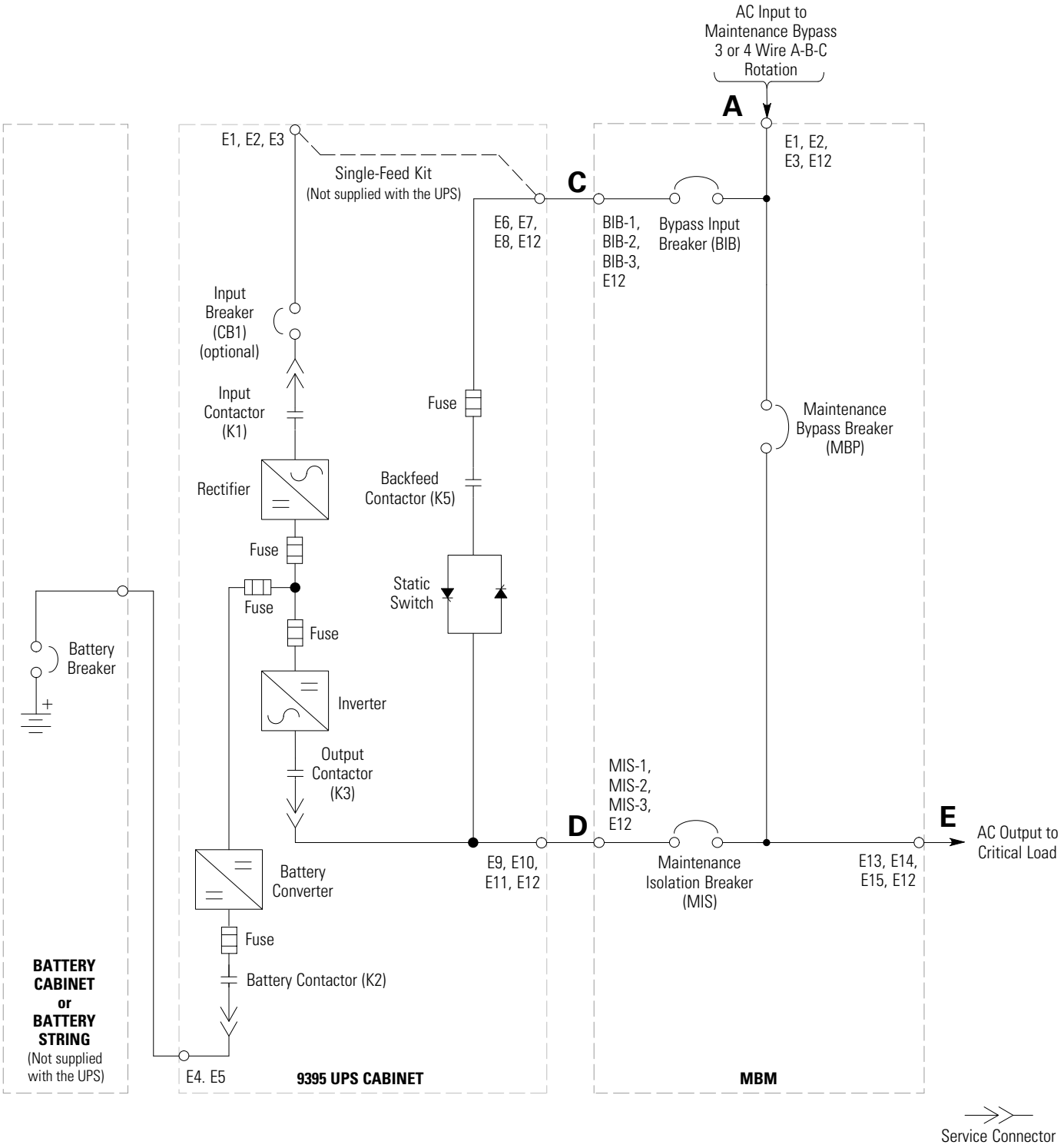

NOTE *Callout letters **A**, **C**, **D**, and **E** map to Table 3-4 on page 3-6, Table 3-5 on page 3-7, Table 3-6 on page 3-8, and Table 3-7 on page 3-9.*

NOTE *The UPS is shown in a simplified view and does not show multiple UPMs.*

NOTE *If a bypass input breaker (BIB) is installed in the MBM and a single-feed UPS is being installed, a single feed to the maintenance bypass is acceptable for supplying both the UPS and the bypass.*

NOTE *If the load requires a neutral, a bypass source neutral must be provided.*

Figure 5-5. Eaton 9395 MBM with BIB – Single-Feed UPS

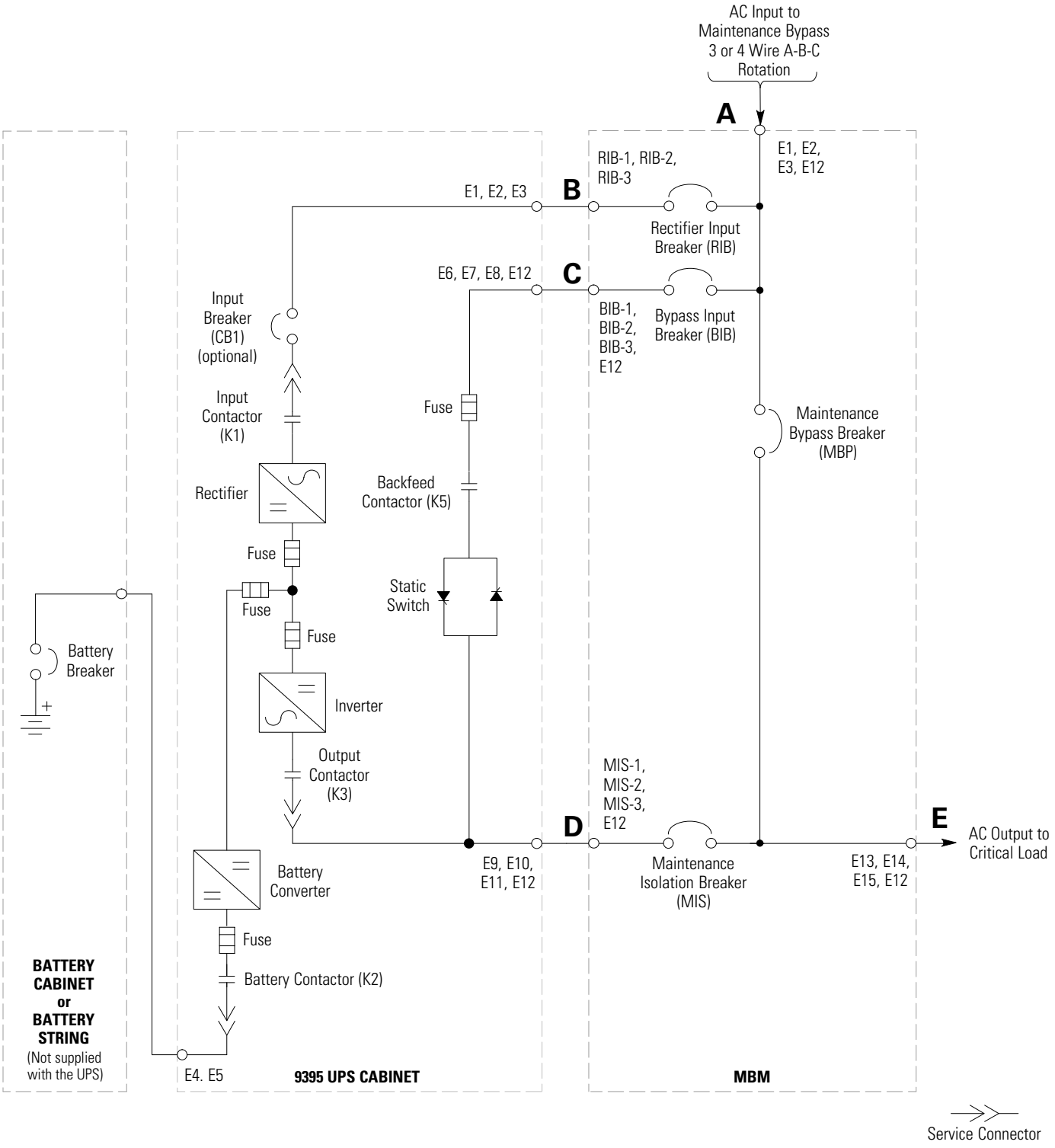

NOTE *Callout letters **A**, **B**, **C**, **D**, and **E** map to Table 3-4 on page 3-6, Table 3-5 on page 3-7, Table 3-6 on page 3-8, and Table 3-7 on page 3-9.*

NOTE *The UPS is shown in a simplified view and does not show multiple UPMs.*

NOTE *If a rectifier input breaker (RIB) and a bypass input breaker (BIB) are installed in the MBM, a single feed to the maintenance bypass is acceptable for supplying both the UPS and the maintenance bypass.*

NOTE *If the load requires a neutral, a bypass source neutral must be provided.*

Figure 5-6. Eaton 9395 MBM with BIB and RIB

Chapter 6 MBM Operating Instructions

This section describes how to operate the Maintenance Bypass Module (MBM).

NOTE *Before using the MBM, ensure all installation tasks are complete and a preliminary startup has been performed by authorized service personnel. The preliminary startup verifies all electrical interconnections to ensure the installation was successful and the system operates properly.*

NOTE *Read this section of the manual and have thorough knowledge of MBM operation before attempting to operate any of the controls.*

6.1 MBM Controls and Indicators

The controls and indicators identified and described in this section are used to control and monitor MBM operation.

The MBM can contain the following controls:

- Maintenance bypass breaker (MBP) (standard)
- Maintenance isolation breaker (MIS) (standard)
- Bypass input breaker (BIB) (optional)
- Rectifier Input breaker (RIB) (optional)

Figure 6-1 through Figure 6-4 show the MBM controls and indicators.

6.2 Using the UPS when an MBM is Installed

NOTE *Before starting the UPS with the MBM, verify all installation tasks are complete and a preliminary startup has been performed by authorized service personnel. The preliminary startup verifies all electrical interconnections to confirm the installation was successful and the UPS operates properly.*

1. Unfasten the MBM front door latch and swing the door open.

2. Verify that the MBM circuit breakers and switches are set as follows:

MBP	Open
MIS	Closed
BIB (if installed)	Closed
RIB (if installed)	Closed

3. Start the UPS in Normal mode. Refer to the instructions in the operation chapter of the applicable Eaton 9395 UPS Installation and Operation manual listed in paragraph 1.7 on page 1-4.

4. Close the front door and secure the latch.

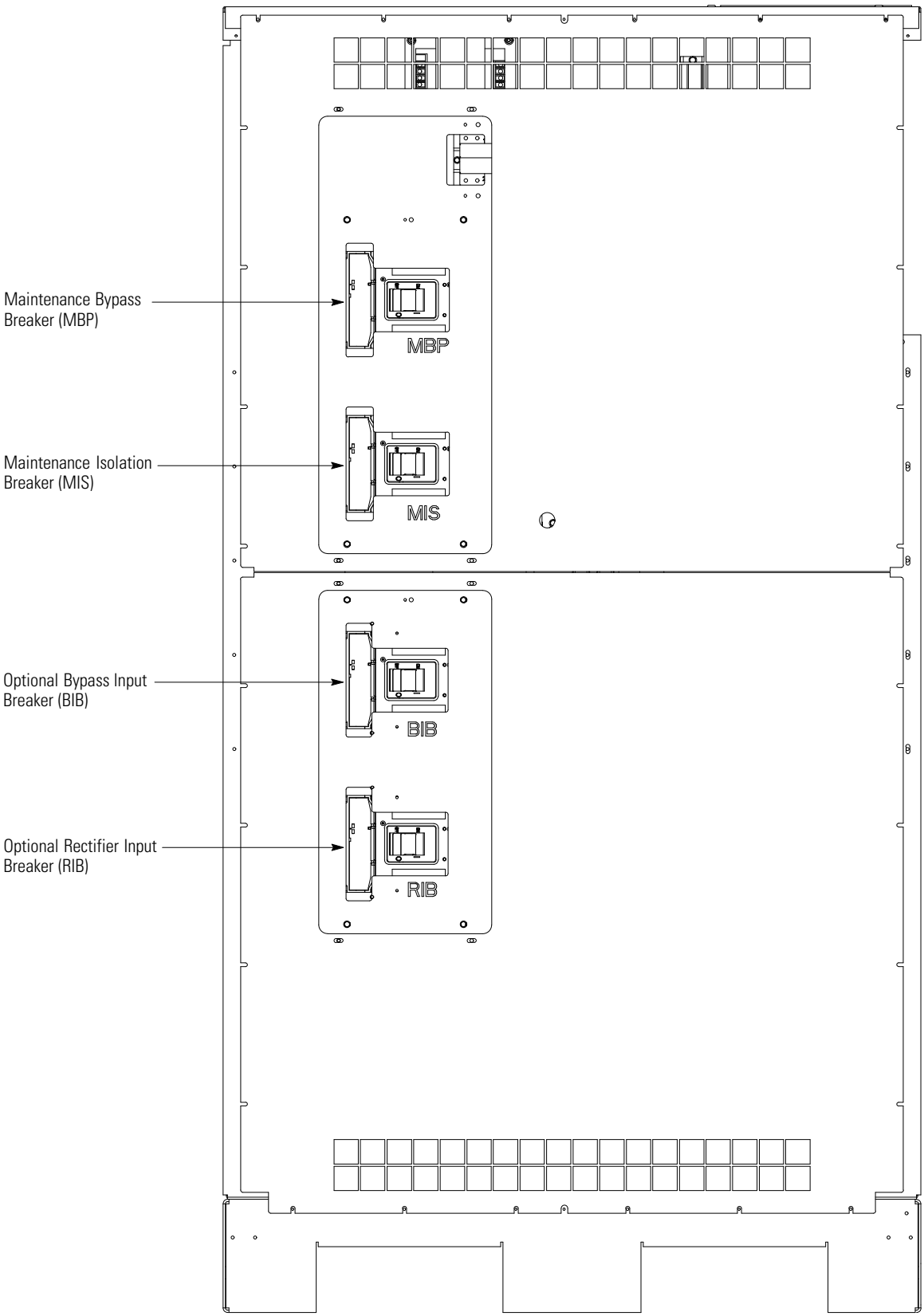

Figure 6-1. Eaton 9395 275 kVA MBM Controls and Indicators (Electrical Interlock)

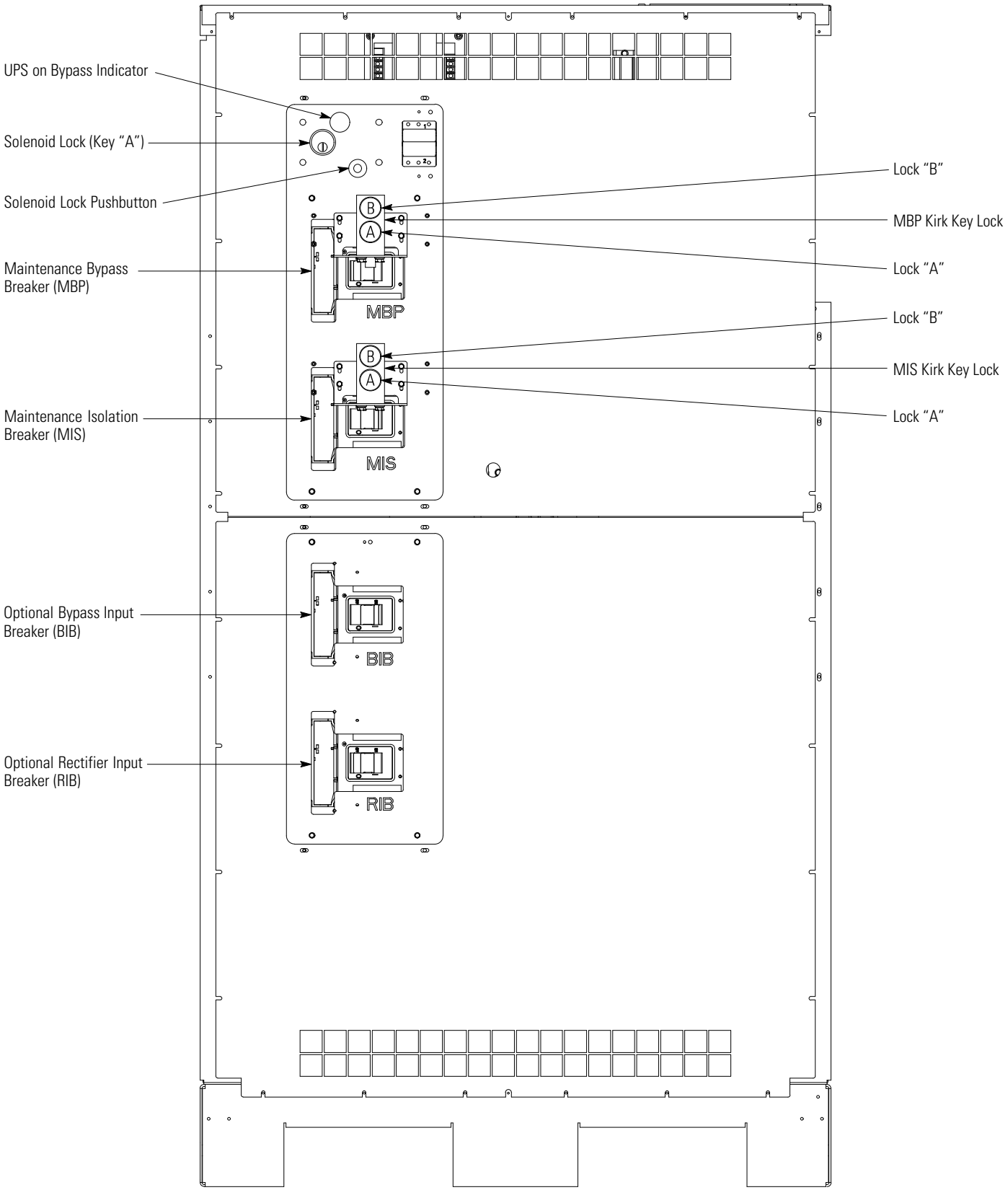

Figure 6-2. Eaton 9395 275 kVA MBM Controls and Indicators (Kirk Key Interlock)

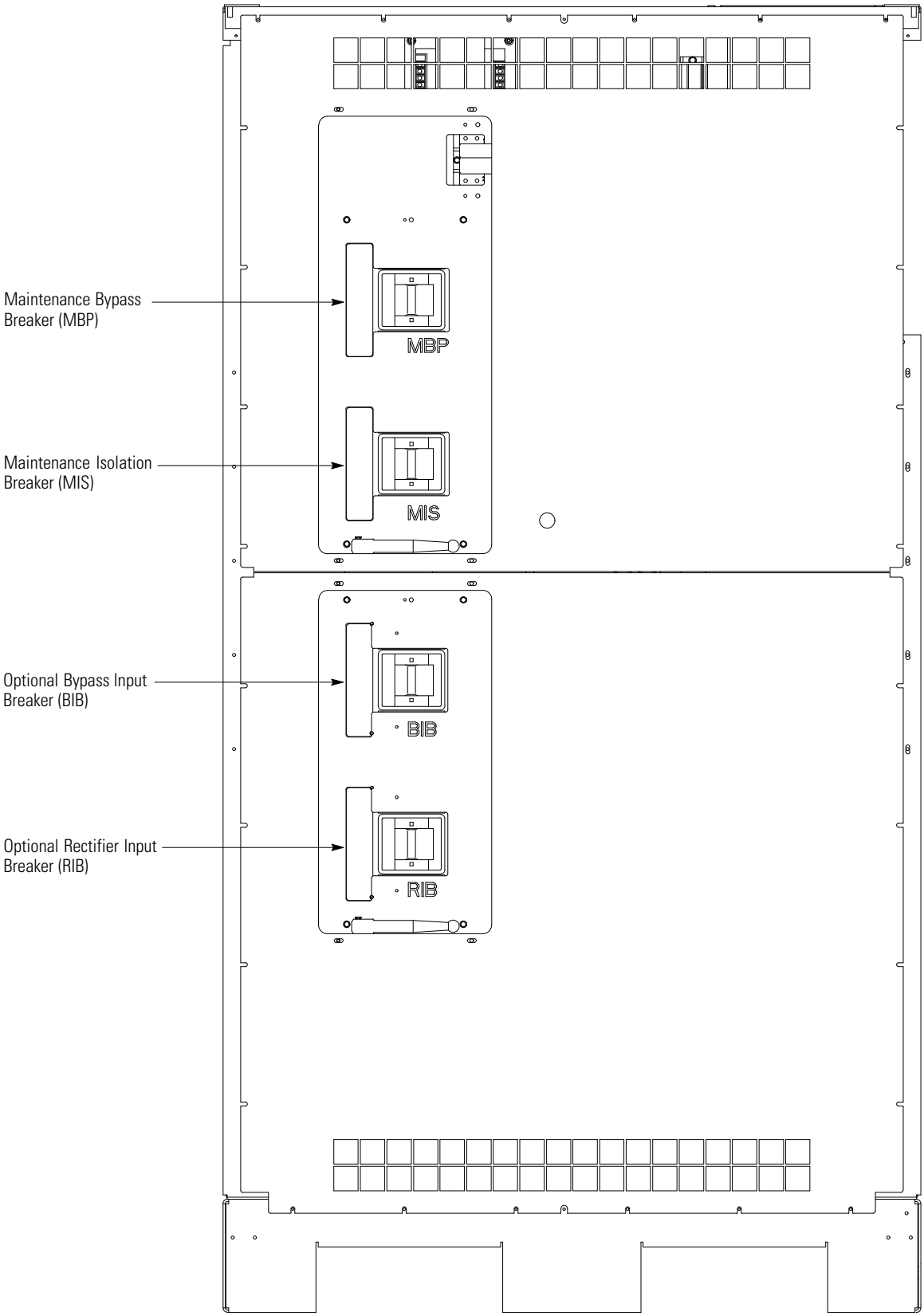

Figure 6-3. Eaton 9395 550 kVA MBM Controls and Indicators (Electrical Interlock)

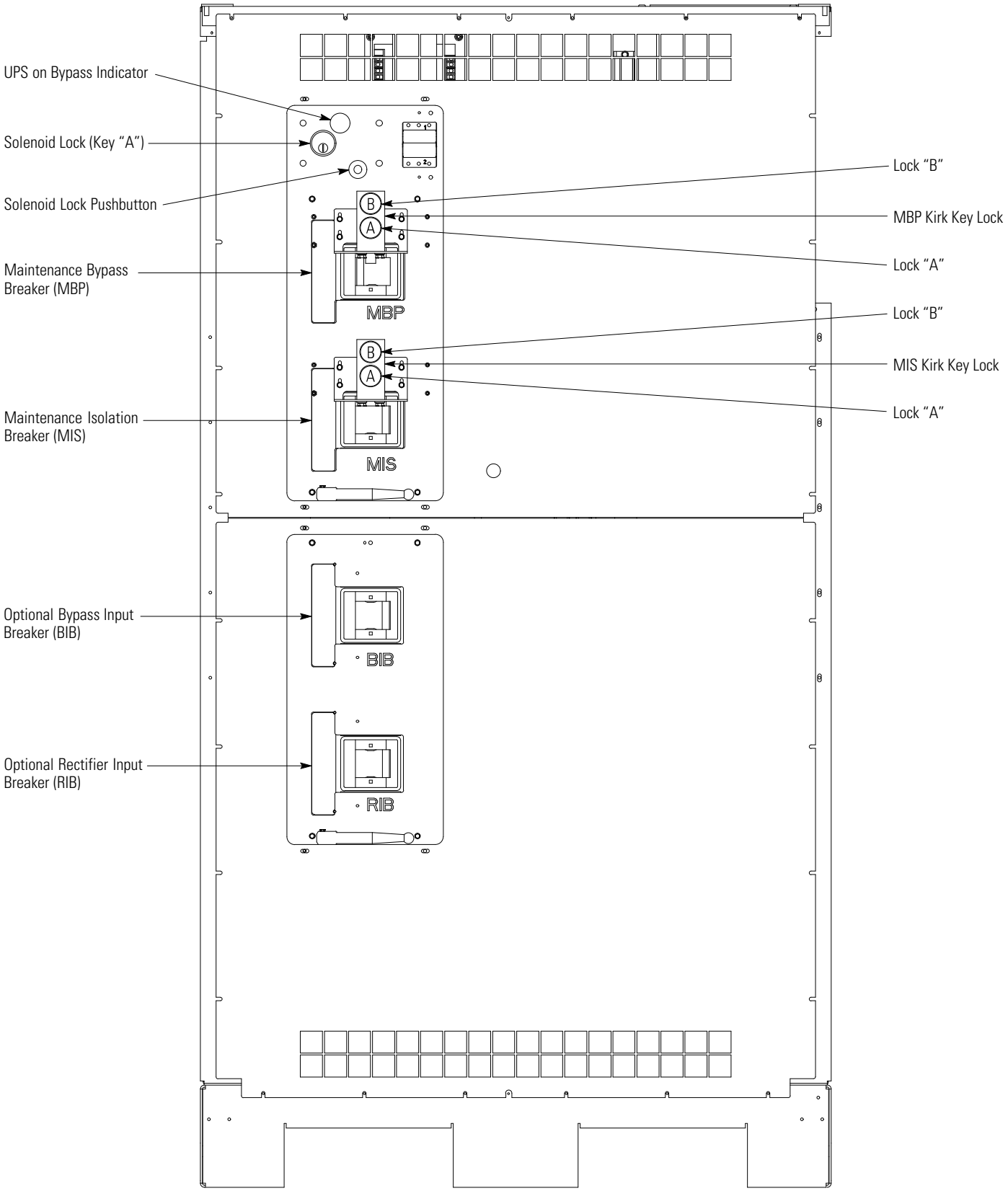

Figure 6-4. Eaton 9395 550 kVA MBM Controls and Indicators (Kirk Key Interlock)

6.3 MBM Operation – Electrical Interlock

6.3.1 Transferring the UPS to Maintenance Bypass

CAUTION

Only trained personnel familiar with the operation of this equipment should transfer loads. Failure to follow this transfer sequence may cause loss of power to loads or overload protection devices to activate.

CAUTION

In Bypass mode, the critical load is not protected from commercial power interruptions and abnormalities.

1. Verify the BIB and RIB (if installed) are closed.
2. Transfer the UPS to Bypass mode. Refer to the instructions in the operation chapter of the applicable Eaton 9395 UPS Installation and Operation manual listed in paragraph 1.7 on page 1-4.

WARNING

Power is present inside the cabinets.

CAUTION

Failure to close the MBP before opening the MIS will result in the loss of power to the critical load.

3. Unfasten the MBM front door latch and swing the door open.

NOTE *If the UPS is not in Bypass mode, the MBP will trip when an attempt is made to close it.*

4. Close the MBP.
5. Open the MIS.

   The critical load is supplied by the maintenance bypass source.
6. Shut down the UPS. Refer to the instructions in the operation chapter of the applicable Eaton 9395 UPS Installation and Operation manual listed in paragraph 1.7 on page 1-4.

CAUTION

The BIB and RIB must be opened to electrically isolate the UPS.

7. Open the BIB and RIB if installed.
8. Close the front door and secure the latch.

6.3.2 Transferring the UPS from Maintenance Bypass

CAUTION

Only trained personnel familiar with the operation of this equipment should transfer loads. Failure to follow this transfer sequence may cause loss of loss of power to loads or overload protection devices to activate.

CAUTION

In Bypass mode, the critical load is not protected from commercial power interruptions and abnormalities.

1. Unfasten the MBM front door latch and swing the door open.
2. Close the BIB and RIB if installed.
3. Start the UPS in Bypass mode. Refer to the applicable Eaton 9395 Installation and Operation manual listed in paragraph 1.7 on page 1-4.

CAUTION

Failure to close the MIS before opening the MBP will result in the loss of power to the critical load.

NOTE *If the UPS is not in Bypass mode, the MIS will trip when an attempt is made to close it.*

4. Close the MIS.
5. Open the MBP.
6. Close the front door and secure the latch.
7. Transfer the UPS to Normal mode. Refer to the instructions in the operation chapter of the applicable Eaton 9395 UPS Installation and Operation manual listed in paragraph 1.7 on page 1-4.

6.4 MBM Operation – Kirk Key (Mechanical) Interlock

6.4.1 Transferring the UPS to Maintenance Bypass

CAUTION

Only trained personnel familiar with the operation of this equipment should transfer loads. Failure to follow this transfer sequence may cause loss of power to loads or overload protection devices to activate.

CAUTION

In Bypass mode, the critical load is not protected from commercial power interruptions and abnormalities.

1. Verify the BIB and RIB (if installed) are closed.
2. Transfer the UPS to Bypass mode. Refer to the instructions in the operation chapter of the applicable Eaton 9395 UPS Installation and Operation manual listed in paragraph 1.7 on page 1-4.

WARNING

Power is present inside the cabinets.

3. Unfasten the MBM front door latch and swing the door open.
4. Verify the UPS on Bypass indicator on the MBM is illuminated. See Figure 6-2 or Figure 6-4.

NOTE *Key "A" can be removed from the solenoid lock only when the UPS on Bypass indicator is illuminated indicating the UPS is on bypass.*

5. Press and hold the solenoid lock pushbutton. Unlock and remove key "A" from the solenoid lock. See Figure 6-2 or Figure 6-4.
6. Insert key "A" into lock "A" on the MBP Kirk key lock. Unlock and close the MBP.

CAUTION

Failure to close the MBP before opening the MIS will result in the loss of power to the critical load.

7. Remove key "B" from the MBP Kirk key lock "B".
8. Insert key "B" into lock "B" on the MIS Kirk key lock. Open the MIS.
9. Lock the MIS and remove key "A" from the MIS Kirk key lock "A".
10. Insert key "A" into the solenoid lock and lock.

    The critical load is supplied by the maintenance bypass source.
11. Shut down the UPS. Refer to the instructions in the operation chapter of the applicable Eaton 9395 UPS Installation and Operation manual listed in paragraph 1.7 on page 1-4.

CAUTION

The BIB and RIB must be opened to electrically isolate the UPS.

12. Open the BIB and RIB if installed.
13. Close the front door and secure the latch.

6.4.2 Transferring the UPS from Maintenance Bypass

CAUTION

Only trained personnel familiar with the operation of this equipment should transfer loads. Failure to follow this transfer sequence may cause loss of loss of power to loads or overload protection devices to activate.

CAUTION

In Bypass mode, the critical load is not protected from commercial power interruptions and abnormalities.

1. Unfasten the MBM front door latch and swing the door open.
2. Close the BIB and RIB if installed.

3. Start the UPS in Bypass mode. Refer to the applicable Eaton 9395 Installation and Operation manual listed in paragraph 1.7 on page 1-4.
4. Press and hold the solenoid lock pushbutton. Unlock and remove key “A” from the solenoid lock. See Figure 6-2 or Figure 6-4.
5. Insert key “A” into lock “A” on the MIS Kirk key lock. Unlock and close the MIS.

CAUTION

Failure to close the MIS before opening the MBP will result in the loss of power to the critical load.

6. Remove key “B” from the MIS Kirk key lock “B”.
7. Insert key “B” into lock “B” on the MBP Kirk key lock. Open the MBP.
8. Lock the MBP and remove key “A” from the MBP Kirk key lock “A”.
9. Insert key “A” into the solenoid lock and lock.
10. Close the front door and secure the latch.
11. Transfer the UPS to Normal mode. Refer to the instructions in the operation chapter of the applicable Eaton 9395 UPS Installation and Operation manual listed in paragraph 1.7 on page 1-4.

This page intentionally left blank.

Chapter 7 MBM Maintenance

The components inside the Maintenance Bypass Module (MBM) cabinet are secured to a sturdy metal frame. All repairable parts and assemblies are located for easy removal, with very little disassembly. This design allows authorized service personnel to perform routine maintenance and servicing quickly.

You must schedule periodic performance checks of your UPS system to keep it running properly. Regular routine checks of operation and system parameters enable your system to function efficiently for many trouble-free years.

7.1 Important Safety Instructions

Remember that your UPS system is designed to supply power **EVEN WHEN DISCONNECTED FROM THE UTILITY POWER**. The MBM interior is unsafe until the UPS is shut down (inverter output and bypass) and bypass utility power to the MBM is disconnected.

WARNING

- Servicing and maintenance should be performed by qualified service personnel only.
- LETHAL VOLTAGE PRESENT. This unit should not be operated with the cabinet doors open or protective panels removed. Do not make any assumptions about the electrical state of any cabinet in the UPS system.

7.2 Performing Preventive Maintenance

The MBM requires very little preventive maintenance. However, the system should be inspected periodically to verify that the units are operating normally.

7.2.1 DAILY Maintenance

Perform the following steps daily:

1. Check the area surrounding the UPS system. Ensure the area is not cluttered, allowing free access to the unit.
2. Ensure the exhaust opening (on top of the MBM cabinet) is not blocked.
3. Ensure the operating environment is within the parameters specified in paragraph 3.2.1 on page 3-1 and Chapter 8, “Product Specifications.”
4. Ensure the MBM breakers are in normal operating mode.

7.2.2 PERIODIC Maintenance

Periodic inspections of the MBM should be made to determine if components, wiring, and connections exhibit evidence of overheating. Particular attention should be given to bolted connections. Maintenance procedures should specify that the bolted connections be retorqued to values listed in the manual.

7.2.3 ANNUAL Maintenance

Annual preventive maintenance should be performed only by authorized service personnel familiar with maintenance and servicing of the UPS system. Contact an Eaton service representative for more information about service offerings.

7.3 Short Circuits

Short circuits are not considered normal phenomena in UPS applications. Tripping of protective devices due to low impedance short circuits should be thoroughly investigated for damage to conductors, insulation, and the protective devices in accordance with the manufacturer's recommendations.

7.4 Recycling the Used MBM

Contact your local recycling or hazardous waste center for information on proper disposal of the used MBM.

CAUTION

Do not discard waste electrical or electronic equipment (WEEE) in the trash. For proper disposal, contact your local recycling/reuse or hazardous waste center.

7.5 Maintenance Training

A basic training course, available from Eaton Corporation, gives you a competent working knowledge of the UPS system operation and teaches you how to perform first level corrective maintenance. For more information about training and other services, contact the Help Desk (see page 1-5).

Chapter 8 Product Specifications

8.1 Model Numbers

The Maintenance Bypass Module (MBM) is housed in a free-standing cabinet with safety shields behind the doors.

Models	Power Rating	Frequency
Eaton 9395 275 kVA MBM	275 kVA	50/60 Hz
Eaton 9395 550 kVA MBM	550 kVA	50/60 Hz

The following sections detail the input, output, and environmental specifications for the MBM.

8.2 Specifications

8.2.1 MBM Input

Operating Input Voltage	480 Vac
Operating Input Frequency	50/60 Hz
Operating Input Current	See Table 3-4 on page 3-6, Table 3-5 on page 3-7, Table 3-6 on page 3-8, or Table 3-7 on page 3-9.

8.2.2 MBM Output

Operating Output Voltage	480 Vac
Operating Output Frequency	50/60 Hz
Operating Output Current	See Table 3-4 on page 3-6, Table 3-5 on page 3-7, Table 3-6 on page 3-8, or Table 3-7 on page 3-9.

8.2.3 MBM Environmental

Operating Temperature	0 to 40°C (32 to 104°F) without derating. The recommended operating temperature is 25°C (77°F).
Operating Altitude	Maximum 1500m (5000 ft) at 40°C without derating
Storage Temperature	–25 to +60°C
Relative Humidity (operating and storage)	5% to 95% maximum noncondensing
Acoustical Noise	N/A
EMI Suppression	N/A
Electrostatic Discharge (ESD) Immunity	N/A

This page intentionally left blank.

Warranty

LIMITED FACTORY WARRANTY FOR THREE-PHASE EATON® UPS PRODUCTS

WARRANTOR: The warrantor for the limited warranties set forth herein is Eaton Corporation, an Ohio Corporation ("Eaton").

LIMITED WARRANTY: This limited warranty (this "Warranty") applies only to the original end-user (the "End-User") of the Eaton Three-Phase UPS Products (the "Product") and cannot be transferred. This Warranty applies even in the event that the Product is initially sold by Eaton for resale to an End-User.

LIMITED WARRANTY PERIOD: The period covered by this Warranty for Product installed [and currently located] in the fifty (50) United States and the District of Columbia is twelve (12) months from the date of Product startup or eighteen (18) months from the date of Product shipment, whichever occurs first, for parts coverage and 90 days from the date of Product startup for labor coverage. The period covered by this Warranty for Product installed [and currently located] outside of the fifty (50) United States and the District of Columbia is twelve (12) months from the date of Product startup or eighteen (18) months from the date of Product shipment, whichever occurs first, for parts coverage.

WHAT THIS LIMITED WARRANTY COVERS: The warrantor warrants that the Eaton three-phase UPS electronics, Eaton-built accessories, and Eaton -built battery cabinets (individually and collectively, the "Warranted Items") are free from defects in material and workmanship. If, in the opinion of Eaton, a Warranted Item is defective and the defect is within the terms of this Warranty, Eaton's sole obligation will be to repair or replace such defective item (including by providing service, parts, and labor, as applicable), at the option of Eaton. The Warranted Item will be repaired or replaced onsite at the End-User's location or such other location as determined by Eaton. Any parts that are replaced may be new or reconditioned. All parts replaced by Eaton shall become the property of Eaton.

WHAT THIS LIMITED WARRANTY DOES NOT COVER: This Warranty does not cover any defects or damages caused by: (a) failure to properly store the Product before installation, including the "trickle charge" of batteries no later than the date indicated on the packaging; (b) shipping and delivery of the Product if shipping is FOB Factory; (c) neglect, accident, fire, flood, lightning, vandalism, acts of God, Customer's neglect, abuse, misuse, misapplication, incorrect installation; (d) repair or alteration not authorized in writing by Eaton personnel or performed by an authorized Eaton Customer Service Engineer or Agent; or (e) improper testing, operation, maintenance, adjustment, or any modification of any kind not authorized in writing by Eaton personnel or performed by an authorized Eaton Customer Service Engineer or Agent.

This Warranty is not valid: (a) unless an authorized Eaton Customer Service Engineer (in the USA) or Agent (outside of the USA) performs startup and commissioning of the Product; (b) if the Product is moved to a new location by someone other than an authorized Eaton Customer Service Engineer (in the USA) or Agent (outside of the USA); or (c) if the Product's serial numbers have been removed or are illegible. Any Warranted Items repaired or replaced pursuant to this Warranty will be warranted for the remaining portion of the original Warranty subject to all the terms thereof. Labor warranty is not provided for Product located outside of the fifty (50) United States or the District of Columbia. Any equipment, parts, or materials included in the Product and not manufactured by Eaton are warranted solely by the manufacturer of such equipment, parts, or materials and are not included as part of this Warranty. Batteries are not warranted by Eaton.

THIS WARRANTY IS THE END-USER'S SOLE REMEDY AND IS EXPRESSLY IN LIEU OF, AND THERE ARE NO OTHER EXPRESSED OR IMPLIED GUARANTEES OR WARRANTIES (INCLUDING ANY IMPLIED WARRANTY OF MERCHANTABILITY OR FITNESS FOR ANY PURPOSE, WHICH ARE EXPRESSLY DISCLAIMED).

LIMITATION OF LIABILITY: In no event shall Eaton be liable for any indirect, incidental, special, or consequential damages of any kind or type whatsoever, or based on any claim or cause of action, however denominated. Eaton shall not be responsible for failure to provide service or parts due to causes beyond Eaton's reasonable control. In no case will Eaton's liability under this Warranty exceed the replacement value of the Warranted Items.

END-USER'S OBLIGATIONS: In order to receive the benefits of this Warranty, the End-User must use the Product in a normal way; follow the Product's user's guide; and protect against further damage to the Product if there is a covered defect.

OTHER LIMITATIONS: Eaton's obligations under this Warranty are expressly conditioned upon receipt by Eaton of all payments due to it (including interest charges, if any). During such time as Eaton has not received payment of any amount due to it for the Product, in accordance with the contract terms under which the Product is sold, Eaton shall have no obligation under this Warranty. Also during such time, the period of this Warranty shall continue to run and the expiration of this Warranty shall not be extended upon payment of any overdue or unpaid amounts.

COSTS NOT RELATED TO WARRANTY: The End-User shall be invoiced for, and shall pay for, all services not expressly provided for by the terms of this Warranty, including without limitation site calls involving an inspection that determines no corrective maintenance is required. Any costs for replacement equipment, installation, materials, freight charges, travel expenses, or labor of Eaton representatives outside the terms of this Warranty will be borne by the End-User.

OBTAINING WARRANTY SERVICE: In the USA, call the Eaton Customer Reliability Center 7x24 at 800-843-9433. Outside of the USA, call your local Eaton sales or service representative. For comments or questions about this Limited Factory Warranty, write to the Customer Quality Representative, 3301 Spring Forest Road, Raleigh, North Carolina 27616 USA.

164201719 3